Amateur Radio

Volume 79
Number 9
September 2011
Price: $7 incl GST
www.wia.org.au

WIRELESS INSTITUTE OF AUSTRALIA

NCRG new 20 m beam

HF projects to build:
Tuning indicator

50 Ω band pass filters

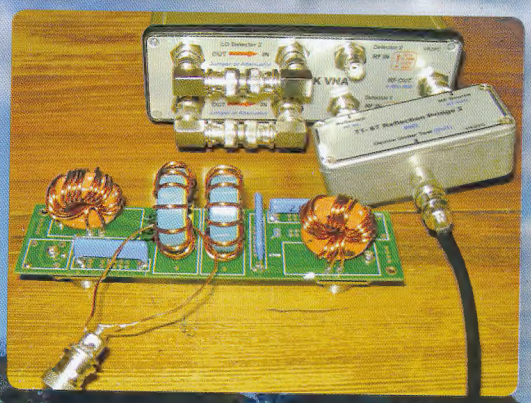

ISSN 0002-6859
09
9 770002 685093

YAESU

A TECHNOLOGY BREAKTHROUGH

THE NEW PRESTIGIOUS COMPACT RADIO WITH APRS

VX-8DR/E **VX-8GR/E**

Vertex Standard (Australia) Pty Ltd
10 Wesley Court, Burwood East, Victoria 3151, Tel: **1800 356 254**
http://www.vxstd.com.au

Shepparton Hamfest
Sunday 11 September 2011

Ballarat Hamfest
Sunday 23 October 2011

Amateur Radio

Volume 79
Number 9
September 2011
ISSN 0002-6859

The Journal of the Wireless Institute of Australia

Editorial

Editor
Peter Freeman VK3PF
editor@wia.org.au

Technical Editor
Peter Gibson VK3AZL

Publications committee
Don Jackson VK3DBB
Evan Jarman VK3ANI
Bill Roper VK3BR
Ewen Templeton VK3OW
Ernie Walls VK3FM
Greg Williams VK3VT

All circulation matters
nationaloffice@wia.org.au

How to submit material
Secretary
AR Publications Committee
PO Box 2042
BAYSWATER VIC 3153
or *armag@wia.org.au*

Letters to Editor
Editor AR Magazine
PO Box 273
Churchill Vic 3842
or *editor@wia.org.au*

Hamads
'Hamads'
PO Box 2042
BAYSWATER VIC 3153
hamads@wia.org.au

Advertising
All enquiries to
Advertising Manager
AR Publications Committee
PO Box 2042
BAYSWATER VIC 3153
or *admanager@wia.org.au*

Registered Office
Unit 20 11-13 Havelock Road
BAYSWATER VIC 3153
Australia
Phone: 03 9729 0400
Fax: 03 9729 7325

Production Deadlines
All articles, columns, hamads and advertising booking by **first day of previous month.**

The contents of Amateur Radio are Copyright Wireless Institute of Australia © 2011

General

GippsTech 2011 - A personal review 6, 56
Roger Harrison VK2ZRH

Pierce Healy VK2APQ, Honorary Life Member of the WIA, is 100 years old! 51
Peter Wolfenden VK3RV

Technical

Build your own 200 watt 50 Ohm band- pass filters 8
Roderick Wall VK3YC

The Simple SDR: a basic software defined radio anyone can build – Part One 30
Peter Parker VK3YE

A simple and reliable tuning indicator for a 100 watt HF transmitter 33
Warren Stirling VK3XSW

This month's cover

The background for this month is the new 20 m beam added to the mast at the Northern Corridor Radio Group station in VK6 – see the VK6 News on page 16 for further details. In this issue we also have some relatively simple projects to build, with two of them featuring as the inset photographs on the cover.
On the left we have the heart of the tuning indicator for a 100 W HF transmitter, by Warren VK3XSW – the project starts on page 33.
On the right is the band pass filter unit described by Roderick VK3YC. This article starts on page 8.

Columns

ALARA	46
AMSAT	37
Contests	42
DX - News & Views	18
Editorial	2, 5
Hamads	54
Silent Key	50
Spotlight On SWLing	26
VHF/UHF – An Expanding World	39
WIA Comment	3, 5
WIA News	4
News from:	
VK2	20
VK3	21, 22, 23, 29
VK4	23, 24
VK5	36
VK6	16
VK7	27

Contributions to Amateur Radio

Amateur Radio is a forum for WIA members' amateur radio experiments, experiences, opinions and news. Manuscripts with drawings and/or photos are welcome and will be considered for publication. Articles attached to email are especially welcome. The WIA cannot be responsible for loss or damage to any material. Information on house style is available from the Editor.

Back Issues
Back issues are available directly from the WIA National Office (until stocks are exhausted), at $8.00 each (including postage within Australia) to members.

Photostat copies
If back issues are unavailable, photocopies of articles are available to members at $2.50 each (plus an additional $2 for each additional issue in which the article appears).

Disclaimer
The opinions expressed in this publication do not necessarily reflect the official view of the WIA and the WIA cannot be held responsible for incorrect information published.

Amateur Radio Service

A radiocommunication service for the purpose of self-training, intercommunication and technical investigation carried out by amateurs; that is, by duly authorised persons interested in radio technique solely with a personal aim and without pecuniary interest.

Wireless Institute of Australia

The world's oldest
National Radio Society, founded 1910.

Representing
The Australian Amateur Radio Service
Member of the
International Amateur Radio Union

Registered Office of the WIA
Unit 20, 11-13 Havelock Road
Bayswater, Victoria, 3153
Tel: (03) 9729 0400 Fax (03) 9729 7325
email: *nationaloffice@wia.org.au*
http://www.wia.org.au

All mail to
PO Box 2042 BAYSWATER VIC 3153
Business hours: 10am – 4pm weekdays

National Office staff

Manager	Mal Brooks	VK3FDSL
Administration Officer	Margaret Williams	
Examination Officer	Dianne Ashton	VK3FDIZ

Board of Directors

President	Michael Owen	VK3KI
Vice-President	Phil Wait	VK2ASD
Directors	Philip Adams	VK3JNI
	Bob Bristow	VK6POP
	Ewan McLeod	VK4ERM
	Chris Platt	VK5CP
Secretary	Sarah Thompson	VK3AUD
Treasurer	John Longayroux	VK3PZ

Coordinators

AMSAT	Paul Paradigm	VK2TXT
ARDF	Jack Bramham	VK3WWW
Australian ARISS	Tony Hutchison	VK5ZAI
Awards	Keith Bainbridge	VK6RK
Clubs	Ted Thrift	VK2ARA
Contests	Craig Edwards	VK8PDX
John Moyle Field Day	Denis Johnstone	VK4AE
*Editor '**AR**'*	Peter Freeman	VK3PF
EMC/EMR	Gilbert Hughes	VK1GH
	Keith Malcolm	VK1ZKM
Standards	Gilbert Hughes	VK1GH
	David Wardlaw	VK3ADW
	John Bishop	VK2ZOI
NTAC	John Martin	VK3KM
Historian	Peter Wolfenden	VK3RV
IARU Region 3 Liaison	Chris Platt	VK5CP
Monitoring Service	Peter Young	VK3MV
International Travel Host	John Miller	VK3DJM
ITU Conference & Study Group		
	David Wardlaw	VK3ADW
	Keith Malcolm	VK1ZKM
	Brett Dawson	VK2CBD
	Dale Hughes	VK1DSH
QSL Curator	National Office	
Repeater	Peter Mill	VK3ZPP
Webpage	Robert Broomhead	VK3DN
Emergency Communications Group		
Coordinator	Phil Wait	VK2ASD
Members	Ewan McLeod	VK4ERM
	Peter Young	VK3MV

Editorial

Peter Freeman VK3PF

More milestones

As I mentioned last month, Pierce Healy VK2APQ reached his 100th birthday on the middle of August – I understand that the big day is on the weekend that the proof reading team will be checking out this issue of *AR*. Wally Green VK6WG also reached the milestone this month, with a report of his radio activities appearing last month. This month we have a report from Peter Wolfenden VK3RV about Pierce and his past activities. ARNSW is also planning a celebration at the Dural property in early September, so check out the ARNSW website or listen to their broadcast for details.

Amateur Radio Victoria is gearing up for its own centenary celebrations in November. Jim VK3PC gives us an overview in this month's ARV news, with opportunities to work VK3WI to earn points towards the Amateur Radio Victoria Centenary Award during the RD and ILLW weekends (this news will probably be too late for most readers I suspect, but I am sure ARV will have been promoting the award via the WIA News broadcasts).

Articles for *AR*

As I have indicated in the past, last year produced a flood of contributions for publication in *AR* covering various aspects relating to the history of our hobby in Australia. Some of these contributions are still being worked on by Publications Committee (PubCom) or others who have been drafted to assist. The plan is that most will eventually be published and all material will be added to the WIA Archive for use by future historians.

This flood has caused some headaches, as many other articles are still awaiting publication, delayed by the need to publish many of the historical articles during the centenary year. We are now slowly catching up on some of the backlog, with three excellent simple construction articles finally published in this issue, having been submitted in August or September last year.

We currently have a maximum delay of twelve months for most articles, with only a few remaining in our stockpile of material ready for publication. I will be endeavouring to publish the few remaining very old articles in the next couple of issues and I thank the contributors for their patience and understanding.

I always have a challenge at the start of each month – what articles do I include in the coming issue? Some articles will need to be published almost immediately, especially general articles which contain time sensitive material.

At the last meeting of PubCom, we discussed the need for the technical editor team members to please process the articles that they have for review as quickly as possible. Of course, this raises another issue – the PubCom team members are all volunteers, doing the work to support your magazine in their spare time. Even so, as a team we will be working hard to move new contributions through the review and preparation steps as quickly as possible.

That will mean that I will have more articles from which to choose for each issue, with a buffer of around six to twelve months. How can the delay be reduced? One option would be to increase the size of the magazine each month from March to November, increasing it to the 64 pages used for the December and January/February issues. It is a simple but expensive solution. We have ruled out that option, as it would destroy our budget.

Another option would be to decrease the number of pages allocated to Club News items.

Continued on page 5

WIA comment

Michael Owen VK3KI

Station Inspections and "Possession"

In the April 2011 issue of *Amateur Radio* magazine I described the WIA's concerns arising from some station inspections in relation to the question of the possession by amateurs of some transmitters and the manner in which some station inspections had been undertaken.

It had emerged that the ACMA field staff were taking the relevant legislation into account but also that the ACMA did not have formal policies or operational procedures addressing either issue. The WIA strongly urged the ACMA to develop appropriate policies and procedures to assist both amateurs and its own staff in the interpretation and application of the legislation.

The ACMA responded by indicating its willingness to do so and to work with the WIA.

As has been reported in the News items in this issue, the ACMA has undertaken a careful examination of both issues, and I have indicated that we are satisfied with the progress that has been made so far.

In particular, our major concerns about the manner in which station inspections are undertaken have been accepted, and we expect the process will be expressed in the ACMA's internal documents in a way that will meet our concerns.

It has been a little more difficult to find an appropriate form of words to deal with the question of possession of radio equipment.

That issue arises because of sections 47 and 48 of the *Radiocommunications Act 1992*. As I said previously, section 47 provides that "... a person must not have a radiocommunications device in his or her possession for the purpose of operating the device otherwise than as authorised by: (a) a spectrum licence; or (b) an apparatus licence; or (c) a class licence."

Section 48 is a series of rebuttable presumptions, that apply in the absence of any evidence to the contrary, that the transmitter is possessed "for the purpose of operation" (but not otherwise than as authorised by a licence).

We are very anxious to ensure that those provisions do not become a barrier to legitimate amateur activities.

However, one matter has emerged that has surprised me, and one which I would like to address here.

I should say that in making the observations I do, I rely on my discussions with a number of amateurs and ACMA staff.

Many commercial amateur transceivers (that is, equipment made specifically for the amateur market) are capable of being modified to transmit on frequencies outside the amateur bands, sometimes by no more than removing a single diode.

I should stress that my comments are confined to exactly that, equipment made specifically for the amateur service. Other equipment that complies with standards, for example for land mobile stations, may also be lawfully used on amateur frequencies.

I started to write this Comment on the basis that an amateur could never modify a commercial amateur transceiver so that it could "operate" (whatever that may mean) on a frequency outside the amateur bands. I do not think that simple solution provides the right answer.

What about using a low power transceiver as a VFO with output on a non amateur frequency for translation to an amateur frequency?

Provided adequate care is taken to ensure that such equipment cannot radiate sufficient energy during transmit periods that would interfere with other services - it would be simply providing a low level signal to be translated to a different amateur allocated/authorised frequency band.

That would seem to me to be legitimate.

On the other hand, I know that a number of amateurs believe that, as their commercial amateur transceiver is of a high technical standard, it can be operated on frequencies covered by Class Licences, such as the Maritime Ship Stations 27 MHz and VHF class licence and the Citizen Band Radio Station class licence.

I know a number of amateurs have in fact used their equipment on frequencies covered by those class licences.

The class licences have power restrictions and the like that may not have been taken into account.

But, much more significantly, the class licences have provision that provide, in effect, that a person must not operate a station under the class licence unless the station complies with each standard made under section 162 of the Act that applies to the station. Section 162 gives the ACMA the power to make "standards".

The ACMA has made standards for most transmitters covered by a class licence, other than the class licence in relation to overseas amateurs visiting Australia.

Section 157 makes it an offence, in effect, to transmit from a "non-standard transmitter" and section 158 makes it an offence to possess for the purpose of operation a

Continued on page 5

WIA news

Work on station inspections continues

Early this year the WIA raised with the ACMA issues relating to the inspection of stations and the background and the WIA position was set out in the Comment published in the April 2011 issue of *Amateur Radio* magazine.

Since then, the WIA has met with the ACMA, the last time being Friday 6 August 2011, when WIA President Michael Owen and WIA government liaison Peter Young attended a meeting in Melbourne.

The issues have been refined to two basic issues – the way inspections are arranged and conducted and, secondly, what equipment an amateur may possess.

There is effective agreement between the WIA and the ACMA on the first issue and substantial agreement in principle on the second issue.

The real difficulty in respect of the second issue is to find an adequate expression of the position in principle that is not simply confusing.

WIA President Michael Owen said that he was very satisfied with the approach being taken to date by the ACMA officers involved and appreciated that some of the issues did raise complicated issues in the legislative framework.

Further information will be contained in the "Comment" section of the September issue of *AR* magazine. This is important information that all amateurs should read.

Extension of time for Club Grant Scheme applications

Applications for Club Grants for 2011 closed on 25 July.

In its release of 27 July, the WIA reported that only a disappointing three applications had been received.

After that one club has asked whether a late entry would be accepted, and offered very legitimate reasons for the lateness of the lodgement of the application.

The WIA Board has decided to accept that application.

It is also conscious of the fact that other clubs may be in a similar position and so it decided to also accept any other late application that was lodged at the WIA office by not later than 4 pm Victorian time, on Tuesday 9 August 2011. Reasons for the lateness of the lodgement are not required.

As a result, six additional applications for a Club Grant were lodged within the extended time.

WIA at Northern Corridor Radio Group Hamfest and Riverina Field Day

The WIA was represented at the Northern Corridor Radio Group Hamfest in Ashfield WA.

WIA Board member Bob Bristow VK6POP manned the WIA stand.

The week before, WIA Manager Mal Brooks VK3FDSL and Dianne Ashton VK3FDIZ welcomed seven new members to the WIA at the Riverina Field Day at Lavington. Over one hundred people attended the very well-run event.

VK6APH receives Award

On Sunday 7 August at the NCRG Hamfest, WIA Director Bob Bristow VK6POP presented Phil Harman VK6APH with the Ron Wilkinson Award certificate.

The award was announced at the recent WIA Annual Conference in Darwin.

Phil was presented the award in recognition of his contribution to amateur radio, especially in digital techniques, and for his contributions to amateur radio literature.

Phil said he was honoured to receive the award.

IARU Region 3 Directors meet

The IARU Region 3 Directors – Chairman Michael Owen VK3KI, Directors Peter Lake ZL2AZ, Shizuo Endo JE1MUI, Prof. Rhee HL1AQQ and Gopal Madhavan VU2GMN met at the offices of JARL in Sugamo, Tokyo Japan on 14, 15 and 16 July 2011. Also participating in his first meeting of Directors since his appointment last March as IARU Region 3 Secretary was Ken Yamamoto JA1CJP, and all were assisted by Keigo Komuro JA1KAB, Special Advisor to the Directors.

IARU President, Timothy Ellam VE6SH, IARU Region 1 President Hans Blondeel Timmerman, PB2T, and IARU Region 2 President Reinaldo Leandro, YV5AMH also participated in the meeting.

The IARU Region 3 Directors were enthusiastic about the planning of the 15th Regional Conference which will, it is expected, commence on 5 November 2012 in Ho Chi Minh City, Vietnam.

It is hoped the Conference will assist the growth of amateur radio in Vietnam.

The Directors agreed that emergency communications would be an appropriate theme for the 15th Regional Conference in Ho Chi Minh City.

The Directors spent much of their time in three working groups investigating the factual situation and exploring the options to be presented to the Member Societies in the report they were asked to present before the next Conference addressing the financial issues facing the Region that had caused such concern at the Christchurch Conference. They were reassured by the Secretary's report that they were currently working comfortably within the budget set by the Christchurch Conference.

Among many matters, the Directors discussed the future of the Monitoring System, and after hearing the comments of IARU President Tim Ellam hope that a satisfactory solution to the concerns identified in Christchurch will be found at the next Administrative Council meeting, to be held in Sun City, South Africa in August 2011.

Editorial

Continued from page 2

Such a step would make more pages available for general and technical articles, but at the expense of less news from around the country. Such news helps us all to understand what is happening in the various corners of this vast continent. We have not taken any decision and I would welcome the views of readers on this issue.

Some readers have asked for an electronic version of the magazine. PubCom has discussed this at length and has decided that we will produce an annual collation of material at the end of this year. This would be similar to the approach taken by the ARRL in some respects – they produce an annual CD containing all the issues of QST, QEX and NCJ. ARRL members can choose to only receive the electronic version of QST, but they must wait for a whole year to receive the "magazine" on CD at the end of the year. I suspect that we are unlikely to follow this approach. We are likely to offer the annual collation as an extra to the printed magazine, available for sale through the WIA Bookshop.

Remember that we always need good high quality photos that we can use on the cover and inside back cover of the magazine – keep the camera handy and send in your high resolution digital photos! Just make sure that you send in a story to go with the photo.

Cheers,

Peter VK3PF

WIA comment

Continued from page 3

device the person knows to be a non standard device, and section 159 is a series of rebuttable presumptions as to the possession being for the purpose of operation.

So, the amateur transceiver modified to operate on the CB or 27 MHz maritime bands cannot be operated on those bands, or indeed, on any other band. In fact, the modification has turned the amateur transmitter into an unlawful non-standard transmitter.

I know that some amateurs have modified their equipment as I have described.

I know that some amateurs have valued such "opened" equipment, and indeed, some equipment has been advertised as "opened".

But I also know that some people have purchased equipment, perhaps even apparently in the ordinary course of trade, not even knowing that it has been modified and is capable of operating on non-amateur frequencies.

All of this is part of the problem that has to be addressed. It is really the reverse of modifying non-amateur equipment to operate lawfully on the amateur licensee's permitted frequencies.

In the end the legislation is clear. We cannot modify commercial amateur transceivers to transmit on non-amateur frequencies.

What is surprising is that some amateurs have not appreciated that it is unlawful to use their amateur equipment to transmit on non amateur frequencies, particularly on the CBRS and maritime 27 MHz frequencies.

Perhaps all of this is saying something about what we cover in the "regulations" component of the amateur qualification?

Major Australian activities for September

11 SADARC COMMS DAY Annual SADARC Hamfest
Northern Victoria's premier Hamfest held at St Augustine's Hall Orr St Shepparton.

Amateur Radio Specialist
Look forward to hearing from you

AMATEUR TRANSCEIVER RADIO CENTRE

Australia's largest stockist of Amateur Equipment

We supply these famous brands

• ALINCO • ICOM* • KENWOOD* • LDG* • YAESU* • DIAMOND* • BUTTERNUT* • DAIWA* • PALSTAR* • ALPHA DELTA* • VERTEX STANDARD* • TARHEEL* • CUSHCRAFT* • GAP* • RADIOWAVZ* • HUSTLER* • SUPER ANTENNAS* • MOSLEY* • HEIL SOUND • SGC • STARTEK* • COMMANDER AMPLIFIERS* • M2 ANTENNA SYSTEMS • HI-Q-ANTENNAS* • TGM* • COMET* • UNIDEN* • SPIDERBEAM* • AVAIR* • MALDOL* • AUTOTENA* • PALOMAR AMPLIFIERS* • BUCKMASTER* • BUXCOMM* • ZCG SCALAR* • SYNCRO* • MOBILE ONE* • OUTBACKER* • BENELEC* • RF INDUSTRIES* • CREATE* • HEAR IT* • RF PARTS* • N2VZ ENTERPRISES* • RM ELECTRONICS* • CHAMELEON ANTENNAS*

*Only equipment purchased from an authorised dealer carries the full manufacturer's warranty.

We have DJ-X11

(02) 9896 2545

www.atrc.com.au

Check out our Hot Specials

Level 2, 141 Gilba Road
Girraween NSW 2145

inquiries@atrc.com.au

Ask what we can do for you,
Les VK2MPZ

We Ship Anywhere

GippsTech 2011 - A personal review

Roger Harrison VK2ZRH

What was on

This year's itinerary of topics is listed below, in more-or-less alphabetical order by presenters' first names.

The other side of GippsTech: out-of-session get-togethers ~ friends with beverages ~ swapping elaborated "war stories". From L-R: David VK3HZ, Andrew VK3OE, Joe VK7JG, Michael VK3KH and Guy VK2KU.

- Andrew VK1DA, Kevin VK4UH, Michael VK3KH, Alan VK3XPD: ***VK9NA 2011***
- Andrew VK1DA: ***Which IF for microwave bands?***
- Andrew VK3OE: ***Propagation measurements using the Tasmanian GPS stabilised beacons.***
- Andrew VK3OE: ***Chirp beacon and radar developments.***
- Andrew VK3OE: ***Development of a solar powered remote site.***
- Chris VK5MC: ***Softrock SDR & JT 144 MHz EME.***
- Dale VK1DSH: ***600 m band experimental licences & experiences.***
- Doug VK3UM: ***Rubidium frequency standards.***
- Doug VK3UM: ***2012 EME Conference, Cambridge, UK.***
- Doug VK3UM: ***Libration.***
- Jack VK3WWW: ***IARU Region 3 ARDF Championships, Maldon.***
- Neil VK2EI: ***Recycling Crimp Connectors - without need for special tools.***
- Rex VK7MO: ***Comparisons of aircraft scatter at 144, 432, 1296 and 10 GHz.***
- Rex VK7MO: ***DX strategies for 10 GHz.***
- Ron VK3AFW: ***Doppler shift estimation for 10 GHz aircraft enhancement.***
- VK2ZRH: ***Chirp backscatter radar: analyses of further HF and VHF propagation experiments and proposals for future use.***
- VK2ZRH: ***Sporadic E: MUF myths, SSSP and forecasting openings.***

GippsTech 'is like a box of chocolates; you never know what you're gonna get', to paraphrase a now-famous aphorism.

2011 was the 14th GippsTech (15th if you count the "Special Edition" in conjunction with the 2009 WIA AGM) and my fifth year attending the conferences. My, how time flies when you're having fun!

This year's conference was held over 9-10 July at the usual venue, the Monash University campus in Churchill, Victoria.

Preamble

There is a good reason why GippsTech rightly claims to be 'the premier technical conference in VK.' It is well organised, well run, attracts interesting presenters who cover wide-ranging topics, and draws an eclectic crowd of practitioners, enthusiasts, dabblers and fanatics, all eager to learn, discuss, critique and be entertained. While GippsTech's primary focus is 'on techniques applicable in the VHF, UHF and microwave bands, especially for weak-signal contacts', the conference's scope has broadened in recent years to include presentations on some of the newer frontiers in amateur radio, such as digital interfaces for transceivers, SDR technologies and LF technologies and techniques, experiments and related propagation phenomena. GippsTech also attracts a small coterie of traders offering useful components, kits, hardware and other paraphernalia of likely interest to the audience.

GippsTech is truly a 'product' of which the Eastern Zone Amateur Radio Club can be justly proud. The 'face' of GippsTech, for those who have not made the excursion, is the redoubtable Peter VK3PF (the erstwhile editor of *Amateur Radio* magazine). Just how he does it, holds down a job, manages family life and even a few amateur field day excursions is truly a wonder. More power to his elbow(s)!

My views

The VK9NA DXpeditions to Norfolk Island (2010 and 2011) have 'set the bar' for concentrated VHF-to-microwave events. They have certainly stirred up a lot of activity, effort and interest, not just around VK-ZL, but worldwide with this year's addition of 2 m EME to the mix. The account by Andrew VK1DA and Kevin VK4UH on Sunday morning was one of GippsTech's highlights, I have to say. Recounting the trials and tribulations that the crew experienced

resulting from tropical cyclone activity in the region was not only entertaining but instructive. While 'planning is everything', execution is open to the perversity of Murphy! The DXpeditioners clearly rose to the challenge. I particularly liked the illustrated explanation of how to nudge a running slip knot in guy ropes using a fibreglass pole with a fork lashed on top.

The topic of 'Which IF for microwave bands?' is a perennial one for anyone venturing above 70 cm. Andrew VK1DA neatly summarised the conflicting issues that have to be considered and offered some potential solutions (or paths to a solution). As often happens, members of the audience found a few more issues to consider! I have to say I learned a few things from this one.

The VK7RAE beacons near Devonport in Tasmania became GPS stabilised in 2010, which set Andrew VK3OE pondering about the propagation vagaries affecting the 2 m and 70 cm signals - would they, or would they not, correlate. Andrew described his experimental setup and detailed the quite intriguing results he found. Out of it all, the exercise raised at least as many questions as it answered.

Andrew VK3OE's Chirp Backscatter Radar for Amateur Use is a significant development for amateur radio, published last year in DUBUS No.2/2010 and detailed at GippsTech 2010. Applications of the concept and the technology have developed apace over the past 14 months. Andrew's Chirp application has been taken up by the global High Performance Software Defined Radio (HPSDR) development project under the Griffin project (see http://openhpsdr.org/wiki/index.php?title=GRIFFIN). A 50 watt Chirp beacon will readily stand in for those stalwarts of 6 m propagation indicators - low band TV stations, which are disappearing the world over at a rate of knots. You better believe it! All the gain is in the Chirp receiver software. Since HPSDR developer Phil Harmon VK6APH gave a presentation on the subject at the Dayton Hamvention in May, a bunch of US amateurs are working on deploying 6 m Chirp beacons in strategic places. Andrew has also set up a remote station near Harcourt in VK3 and is using it to run Chirp radar propagation experiments, and getting some surprising results. In furthering development of the Chirp radar, Andrew has developed a plan-position indicator ('radarscope') display, showing propagation around all points of the compass. Neat!

Remote operation of amateur transceivers has been available for a while and fully-equipped remote stations have sprung up, predominantly in the northern hemisphere. Andrew VK3OE described the trials and tribulations of planning a wholly solar powered remote station, of finding a suitable site, negotiating with the site owners, assembling all the required equipment and facilities, getting it on-air, and the performance to date. I think this sort of thing heralds a new facet in amateur radio that will lead to some significant achievements.

Software defined radio (SDR) is a burgeoning class of technology that is transforming the core system used by amateurs – the transceiver. SDR is being used across many spheres of amateur radio and a host of kits is being offered for the DIYer, while a number of plug-and-play transceiver manufacturers have emerged. One of Australia's moonbounce pioneers, Chris VK5MC, gave the GippsTech audience the benefit of his experience with a Softrock kit rig (see: http://www.wb5rvz.com/sdr/) put to work on 144 MHz EME, teamed with WSJT software and his 'dirty-great dish'.

Down the other end of the spectrum, Dale VK1DSH, detailed the series of experiments carried out on the 600 metre band over 2010 through the benefit of Scientific Licences obtained by the WIA. Digging signals out of the noise is just as important at 500 kHz as it is for weak signals on the microwave bands, although different impediments have to be overcome.

The redoubtable Doug VK3UM regaled us with his experiences of locking-up his shed (well, all the rigs and test gear) with 10 MHz 'Rubidium frequency standards', discards from cellphone networks. It seems that commonly available units, while looking the same have differences to trap the unwary. Doug highlighted the traps for newbies, including photos of one unit inadvertently destroyed. That's what 'learning by experience' is all about. Now we know where to go, and where not to go: 'do not apply 15 V to pin ...'

The 15th International EME Conference will be held in Cambridge, the University town, in the UK next year. For committed moonbouncers, this is the event to attend. Doug VK3UM gave a short exposition promoting the bi-annual event. Those considering imbibing in the spirit of EME (and other libations) should check out http://www.eme2012.com/

Doug's suite of EME software is legendary among moonbouncers. New features and functionality are added at ever-decreasing intervals (or, so it seems!). At this year's GippsTech, Doug demonstrated the latest developments: one for planning operations to avoid severe Doppler arising from the moon's libration ('wobble'), the other for planning 24 GHz EME operations, to avoid or mitigate atmospheric losses. A visit to *http://www.vk3um.com* is a 'must see'.

ARDF - amateur radio direction finding could be likened to 'finding weak (or not-so-weak) signals from a series of transmitters hidden around a course in the bush, without getting lost or losing your temper.' Perhaps 'orienteering with radio steroids' is a better description. Master exponent of the Art of ARDF, Jack VK3WWW, gave the audience a rundown, in his dryly amusing style, on the sport and preparation for the IARU Region 3 Championships to be held near Maldon in September this year. Remarkably, or perhaps unremarkably, ARDF is popular with people of all ages. Check out http://www.iaru-r3.org/ardf/r3ardf.htm

One of the master craftsmen of homebrew amateur radio is Neil VK2EI. His presentation on 'Recycling Crimp Connectors - without need for special tools' was typical of his series of papers given at GippsTech over the years - short, sharp and totally practical, unlike some of mine, which tend to lean towards long, blunt and detailed.

Continued on page 56

Build your own 200 watt 50 Ohm band- pass filters

Roderick Wall VK3YC

Photo 1: 160 metre 200 watt BPF.

Clean up your signals with band-pass filters.

During a contest or field day, are multiple transmitters at a signal site causing QRM? Or do you find that the low pass filter on your solid state transceiver is letting splatter through to the linear amplifier?

If so, then this set of six band-pass filters (BPFs) will help to keep your signal clean. Because the filters are also connected in receive mode, they may also help to keep your receive signals clean. The six BPFs are for the 160 metre, 80 metre, 40 metre, 20 metre, 15 metre and 10 metre bands. Insertion loss is around 0.3 dB and 0.7 dB. Refer to the N2PK VNA plots below. The 50 Ω BPFs are designed to be used with up to a 200 watt transceiver and before the antenna or linear amplifier.

Warning!

The BPFs are not designed to be used after a high power linear amplifier; they are rated for 200 watts. You must also remember to have the correct BPF installed for the band that you are operating on. If you don't you will be asking the BPF to reject and dissipate 200 watts of RF power and you will be left with nothing more than a smoking box. But at least you'll be able to repair it, because you built it. BPF impedance is 50 Ω and should only be connected to 50 Ω transceivers etc.

What the BPFs will not fix

The BPFs are designed to filter the signal on the centre wire of the coax. If RF from an adjacent transceiver is coming down the coax shield or via the 240 VAC mains supply into the transceiver, then the BPFs will not cure this problem. You need to fix this problem before using the BPFs.

To determine how RF is getting into the transceiver. Connect a 50 Ω dummy load or a 50 Ω resistor onto the transceiver antenna connector. If interference is present when the coax shield is not connected to the transceiver, then RF feedback is via the 240 V mains or directly from the antennas. The antennas may be too close to the operating area. A good earthing system may help this situation. Then connect the antenna coax shield to the transceiver ground terminal and check if the interference is present. If present then RF feedback is coming down the coax shield. Another slight possibility if you use an antenna tuner is that the antenna tuner is picking up an adjacent band signal, and is converting this into in band interference that the BPF will allow through to the transceiver.

This project came about because Roy Seabridge VK3GB/G4SEA indicated that our FAMPARC amateur radio club needed BPFs during contests. Two sets of parts were ordered and our project was under way.

Ed Wetherhold W3NQN design

I claim no credit for designing the BPFs as I used Ed Wetherhold's W3NQN excellent 1998 QST article. Refer to the references at the end of this article. This article is about how I built Ed Wetherhold's BPFs. You should use Ed's article in conjunction with this article to build your own BPFs.

The components are mounted on Bob Henderson's 5B4AGN BPF boards. They are of excellent quality, reasonably priced and make building the BPFs a lot easier, I would not do it any other way. Bob has calculated the capacitor values to suit the stray capacitance on his boards. Bob sells the BPF boards and two other boards that contain a binary coded decimal (BCD) decode circuit and connectors. Automatic filter selection can then be accomplished through the use of BCD Band data with transceivers such as Yaesu or the Elecraft K3, or with band select line outputs from transceivers like the PicaStar.

Photo 2: 15 metre BPF.

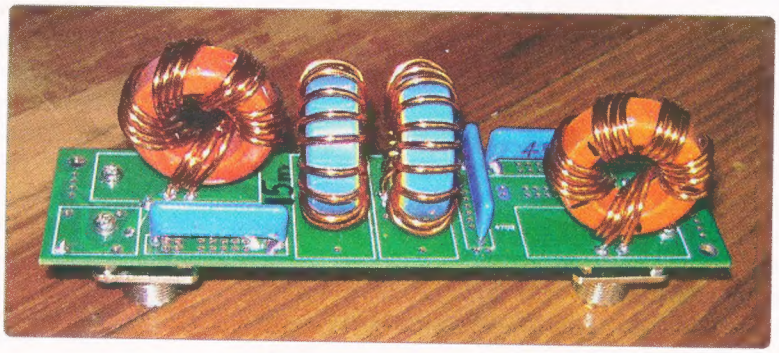

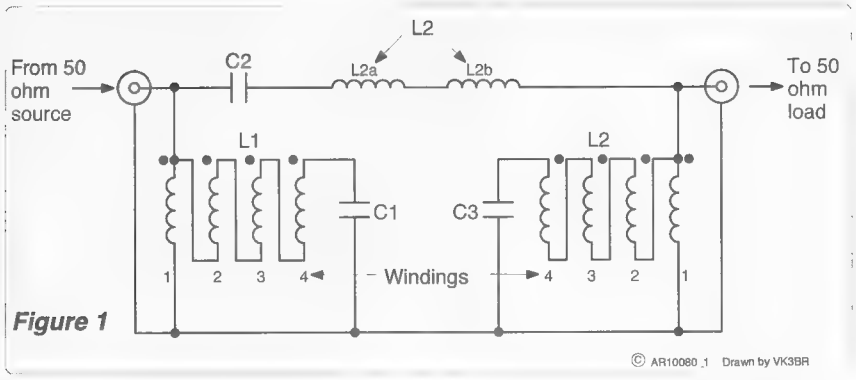

Figure 1: Quadrifilar winding.

All the BPF boards are the same and have pads for mounting relays or SO-239 connectors. Two sets were purchased, one set for Roy and the other set for myself. Both sets have been built and tested. The BPF boards can be mounted side by side inside one box with coax cable running between the relays. Or they can be mounted inside their own box with SO-239 connectors. Shielding and performance may be better when they are mounted in their own separate box. Another advantage with separate BPFs is that they can be moved and used on different transceivers as required during a contest. Refer to Bob's web site for his layout.

The silver mica capacitors were purchased from Tab Components in the United Kingdom. The SHB series radial dipped capacitors are specially made for transmit filters up to 1 kW and are rated for 750 V RMS or 500 V RMS with 8.5 or 10 amps AC. Capacitance tolerance is +/- 1 pF up to 100 pF and +/- 1% over 100 pF. Tab Components indicated that our capacitor order was the first from down under Australia.

Using Bob's boards and Tab Component capacitors meant that I did not have to match hard to find high voltage capacitors to resonate the tune circuits. For L1 and L3, I only had to reduce the spacing of the turns to increase the inductance to make them resonant at the correct centre frequency (Fc). When winding L1and L3, make sure the turns are evenly spaced for minimum inductance. For L2, I changed the spacing and removed one or two turns on three bands. Changing L2 is not a problem as it only has one winding on the core. Bob has indicated that over 100 filters have been built using his boards with his Tab Component capacitor values.

Toroidal cores were purchased as a kit for the W3NQN BPFs from Kits and Parts dot Com.

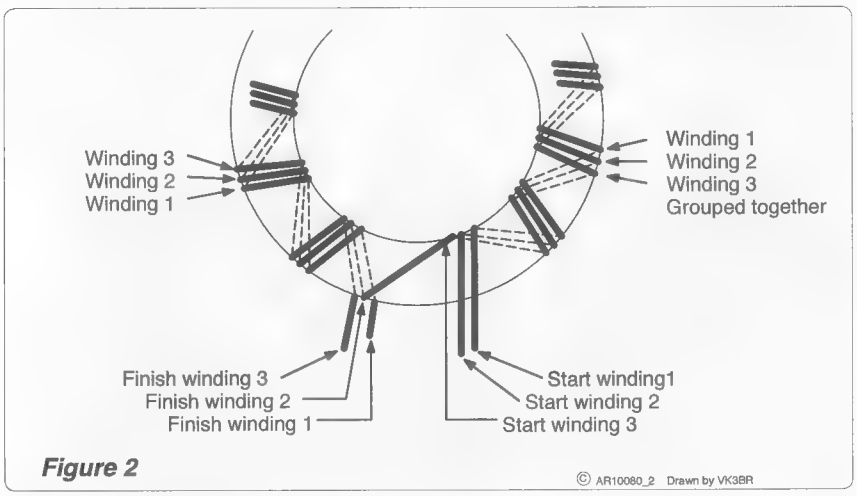

Figure 2: Trifilar winding – L1, L3.

The W3NQN BPFs

Note: For trifilar winding, winding four is deleted, and C1 and C3 are connected to the top of winding three.

The W3NQN BPFs are shunt-series-shunt topology Chebyshev filters that have a tapped parallel resonant circuit at each port. A series resonant circuit is connected between the taps and ports. The parallel resonant circuits are labelled L1/C1 and L3/C3, the series resonant circuit is labelled L2/C2.

Winding the toroidal inductors

L1 and L3 are either quadrifilar or trifilar wound depending on which band, refer to Table 1. Quadrifilar is four windings wound in parallel, trifilar is three windings wound in parallel. Normally you would cut four or three lengths of enamel coated wire and wind them onto the toroid at the same time. You then connect and solder the end and start of each winding until they are connected as in Figure 1.

Ed's L1 and L3 are wound with just two lengths of wire. A short length for winding 1 and a longer length for windings 2 and 3 (trifilar) or two, three and four (quadrifilar). Winding 1 is first wound onto the toroid, winding 2 is wound on, winding 3 is wound, and winding 4 if it is quadrifilar. Notice that as windings 2, 3 and 4 are all connected in series it is possible to wind them as one continuous winding, making sure that each section winds in the correct sequence and layout as if they were individually wound. To group the turns together, each winding is wound next to the last winding as in Figure 2. Make sure the windings are wound in the correct direction to allow them to connect to the pads on the board. I marked the position of each turn on one side of the toroid, this makes it easier to evenly space the turns. That is, for the 40 metre seven turn quadrifilar windings, a mark was made on the toroid every 51.5°. 360° ÷ 7 turns = 51.5°. Refer to Table 1 for winding details.

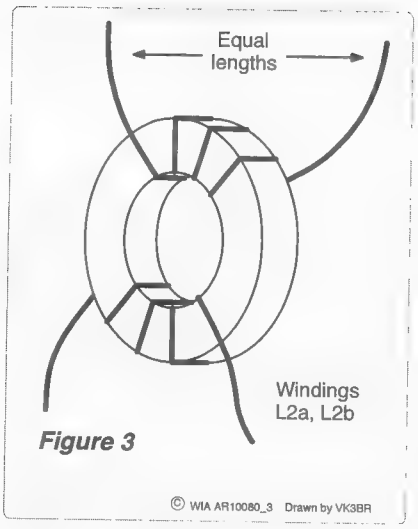

Figure 3: Winding L2a/L2b.

L2 is made by connecting two toroids L2a and L2b in series. They are easier to wind as there is only one winding on each toroid. Refer to Figure 3. Make sure they are wound in the correct direction to allow them to connect to the pads on the board. The wire length is divided into two and each end of the wire is wound onto the toroid until the ends end up as shown at the bottom of the toroid. Thanks Roy for the hint to divide the wire in half and to wind each end onto the toroid, this saves you from dragging the full length of the wire through the toroid for each turn.

I used 1 mm and 1.5 mm diameter enamel coated wire. These sizes are slightly different to what was used in the original article. Refer to Ed's article for wire size and lengths in inches.

Construction sequence

I started with the 40 metre BPF. The order does not matter so long as you remember that the wire sizes change for the 20 metre band and above. Do not forget: both Roy and myself did. Construction for each BPF is in four parts.

(1) Build L1 and C1 onto the board and tune to resonate at Fc. Note: refer to Table 1 for "Fc" for each band.
(2) Build L3 and C3 onto the board and tune to resonate at Fc.
(3) Build L2a, L2b and C2 into the board and tune to resonate at Fc.
(4) Using a VNA or other suitable instrument, check the insertion loss and bandwidth of the completed BPF.

Note: depending on the box size it may be a good idea to tune each BPF inside its box. I found that the box size that Roy made did not affect the tuning after the BPFs were installed.

Because the BPF through power can be as high as 200 watts, the currents flowing in the BPF will be high. When soldering the inductors, capacitors and connectors onto the board, make sure the solder connections are able to carry the high currents.

Assembling - L1/C1, L3/C3

Using M3 x 6 mm screws and spring washers, mount the connector stand-offs onto the board. Wind L1 and solder L1 onto the board. Make sure that L1 is inserted the correct way around with winding 1 connected between ground and the 50 Ω tap point. Note, winding 1 is no longer the thicker wire for 20 metre band and above. Solder C1 onto the board. Use M3 x 10 mm screws and spring washers to mount the SO 239 connectors onto the stand-offs and solder the centre pin connection to the board.

To tune L1/C1, the connector centre pin (tap of L1) is connected via a 3k3 Ω series resistor to the bridge of the N2PK VNA, with BPF ground connected to the VNA ground. MyVNA, the software that I use with my VNA is selected to use reflection mode and to measure/display impedance magnitude (Zs). The scan/display centre frequency is set to Fc for the BPF that is being built. The starting resonant frequency should be above Fc. The turns on L1 are adjusted (squeezed together) to increase the inductance and reduce the resonant frequency until it is the same as Fc. If you haven't wound L1 evenly, then you may have to spread the turns to reduce the inductance and increase the resonant frequency until it is the same as Fc. Ed's article also shows how he made a detector that he used with a signal generator to tune the circuits.

The above procedure is the same for L3/C3 that is connected to the other port.

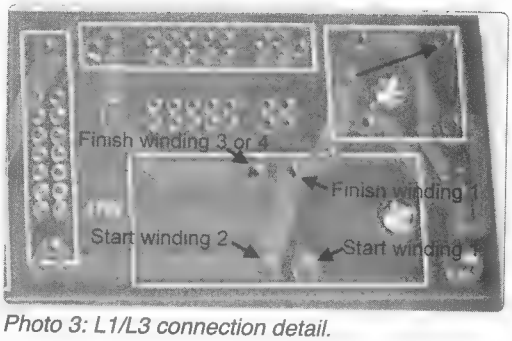

Photo 3: L1/L3 connection detail.

Photo 4: N2PK VNA tuning L2/C2.

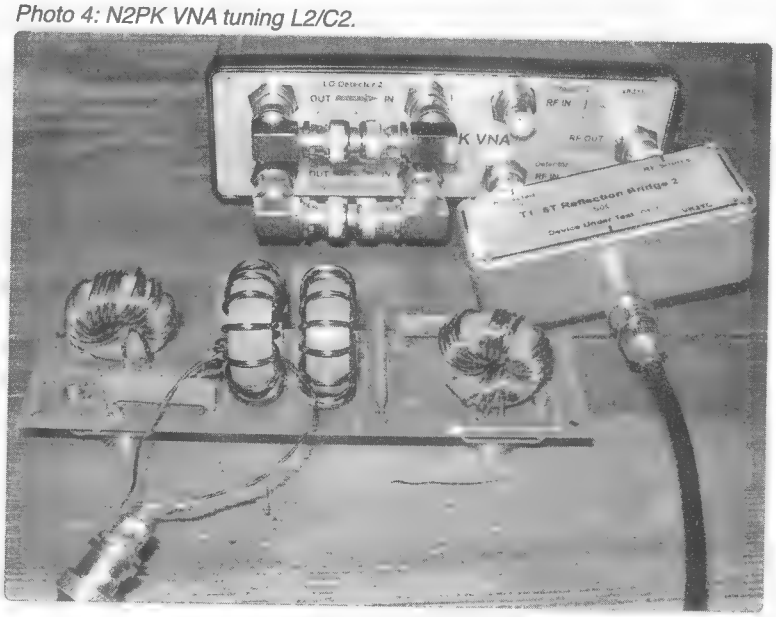

Assembling - L2/C2

Wind L2a and L2b and solder onto the board. Solder C2 onto the board. To tune L2/C2, a short is placed across each port connector. Instead of shorting the connectors, I placed a short between two unused pads of both relays as shown in Photo 3. Note that relays were not installed because I used SO-239 connectors. Connecting both ends of the L2/C2 series resonant circuit to ground disables L1/C1 and L3/C3 from affecting the tuning of L2/C2.

Connect the VNA bridge to L2a or L2b via a loosely coupled one turn coupling link as shown in Photo 4. Use the same VNA software settings that were used for L1/C1 and L3/C3. Change the turns spacing and/or adjust the number of turns on L2a/L2b until the resonant frequency is the same as Fc. Remove the shorts across L1 and L3. If possible, balance the total number of turns between L2a and L2b. Ed's article also describes how he used a bridge and three-peak return-loss response measurements to tune L2/C2.

For my BPFs I ended up with: 38 turns (-1 turn) for 160 metre L2a, 8 turns (-1 turn) for 15 metre L2a, 13 turns (-2 turns) for 10 metre L2b. The number of turns on your toroidal cores may be different depending on the tolerance spread.

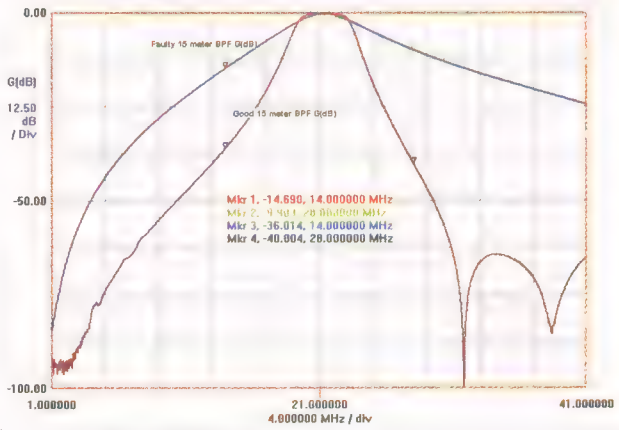

Figure 4: Faulty 15 metre L1/L3.

An interesting fault

While testing Roy's 15 metre BPF, we found that the insertion loss within the band was reasonable, but the adjacent band rejection was not good. Refer to Figure 5. The Return Loss for the good BPF was higher and had three peaks, while the faulty BPF had a lower Return Loss with only one peak.

The problem was that L1 and L3 were installed the incorrect way around on the board. Instead of having winding 1 between ground

Table 1 – Toroidal inductors

160 m	**80 m**	**40 m**	**20 m**	**15 m**	**10 m**
L1/L3:	**L1/L3:**	**L1/L3:**	**L1/L3:**	**L1/L3:**	**L1/L3:**
Fc = 1.87 MHz	Fc = 3.7 MHz	Fc = 7.15 MHz	Fc = 14.88 MHz	Fc = 21.22 MHz	Fc = 28.84 MHz
T130-6	T130-17	T130-17	T130-17	T30-0	T106-0
10 turns quadrifilar.	11 turns trifilar.	7 turns quadrifilar.	5 turns trifilar.	5 turns quadrifilar.	4 turns quadrifilar.
Winding 1 1.5 mm dia 407 mm length	Winding 1 1.5 mm dia 480 mm length	Winding 1 1.5 mm dia 330 mm length	Winding 1 1.5 mm dia 280 mm length	Winding 1 1.5 mm dia 280 mm length	Winding 1 1.5 mm dia 204 mm length
Winding 2, 3, 4. 1 mm dia 1.170 m length	Winding 2, 3. 1 mm dia 860 mm length	Winding 2, 3, 4. 1 mm dia 840 mm length	Winding 2, 3. 1.5 mm dia 460 mm length	Winding 2, 3, 4. 1.5 mm dia 640 mm length	Winding 2, 3, 4. 1.5 mm dia 510 mm length
C1, C3, 415 pF	C1, C3, 370 pF	C1, C3, 120 pF	C1, C3, 85 pF	C1, C3, 43 pF	C1, C3, 29 pF
160 m	**80 m**	**40 m**	**20 m**	**15 m**	**10 m**
L2:	**L2:**	**L2:**	**L2:**	**L2:**	**L2:**
Fc = 1.87 MHz	Fc = 3.7 MHz	Fc = 7.15 MHz	Fc = 14.88 MHz	Fc = 21.22 MHz	Fc = 28.84 MHz
L2a:	L2a:	L2a:	L2a:	L2a:	L2a:
T130-6	T130-17	T130-17	T30-17	T30-17	T30-17
39 turns 1 mm dia 1.525 m length	37 turns 1 mm dia 1.5 m length	30 turns 1 mm dia 1.22 m length	18 turns **1.5 mm dia** 760 mm length	19 turns **1.5 mm dia** 790 mm length	14 turns **1.5 mm dia** 610 mm length
L2b:	L2b:	L2b:	L2b:	L2b:	L2b:
T130-6	T130-17	T130-17	T30-17	T30-17	T30-17
38 turns 1 mm dia 1.5 m length	37 turns 1 mm dia 1.5 m length	30 turns 1 mm dia 1.22 m length	17turns **1.5 mm dia** 740 mm length	19 turns **1.5 mm dia** 790 mm length	15 turns **1.5 mm dia** 660 mm length
C2, 250 pF	C2, 155 pF	C2, 60 pF	C2, 35 pF	C2, 14 pF	C2, 12 pF

Notes: Bold wire sizes are to remind you to use a different size wire.
The above information was taken from Tables 2A/2B in Ed's article.
C1, C3 and C2 capacitance values are for Bob's 5B4AGN BPF PC Boards.
Refer to Ed's Tables for wire lengths in inches.

and the 50 Ω tap, windings 2, 3 and 4 were between ground and the 50 Ω tap. Winding 1 was at the top between the 50 Ω tap and C1 or C3. L1/L3 taping points were no longer 50 Ω. This is interesting because we were still able to tune L1 and L3 because the total inductance was correct, only the tapping points were incorrect.

Solution, unsolder L1 and L3 and install them the correct way around.

BPFs in their boxes

Roy was kind enough to make some nice home-made aluminium boxes, 70 mm x 70 mm x 170 mm. 10 mm x 10 mm aluminium angle was pop riveted to the sides to hold them together. The BPF is mounted on the front panel with four M3 x 10 mm metal screws. Four lengths of aluminium angle is fixed to the front panel with six pop rivets. To allow access, four self tapping screws were used to mount the front panel to the box. Refer to Photo 1.

Final testing

I used my N2PK VNA to test and plot the insertion loss and bandwidth for each BPF. Refer to the BPF plots below. A final test was also completed using the FT-301 transceiver to check the SWR at 100 watt RF power into a 150 W dummy load. Warning! Remember to use the correct BPF for the band that you are testing, or you will let the smoke out.

Label each BPF

Label each BPF to indicate what band it is for. Add a warning label to each BPF.

When using the BPFs, attach a warning label to the transceiver band switch.

WARNING!

- Maximum on band through power is **200 watts**.
- The **CORRECT BPF MUST BE INSTALLED** for the band that the transceiver is on. If you don't, you'll be asking the BPF to reject and dissipate 200 watts – something the BPF is not able to do. You will be left with a smoking box.
- If receiver noise level drops **DO NOT TRANSMIT**. The installed **BPF is NOT** for the band that the transceiver is on.
- BPF should only be used with transceivers that have a 50 Ω antenna impedance.

To ensure the correct label is used for each BPF, use a long piece of string or plastic chain to also attach the band switch warning label to the BPF.

WARNING!

Transceiver band switch
MUST NOT BE CHANGED!
from _____ metres unless the BPF is also changed.
If receiver noise level drops
DO NOT TRANSMIT.
The installed BPF is not for the band that the transceiver is on.
This label MUST be attached to the transceiver band switch.

MyVNA, the software for the N2PK VNA now has a feature where different marker parameters can be displayed inside a Marker Measurement window. Snagit was used to capture and print a label that is then mounted on the side of the BPF boxes.

Parameter	Marker 1	Marker 2	Marker 3	Marker 4
Frequency	1800000.000000	1880000.000000	3480000.000000	7000000.000000
VSWR	1.124106	1.065898	257.849649	266.524457
RL	24.667657	29.924722	0.067372	0.065179
G(dB)	-0.290836	-0.274997	-46.043026	-104.592576

Figure 5: Roy's 160 metre measurement parameter.

Test Equipment

I used a home-brew N2PK VNA (Vector Network Analyser) designed by Paul Kiciak N2PK. This is an excellent piece of home-brew test equipment. Dave Roberts G8KBB has produced free software called myVNA to control and display the results from the N2PK VNA.

Tom Baier DG8SAQ also has a home-brew VNA called the VNWA. Tom sells the VNWA only as an assembled unit. See *http://www.sdr-kits.net/*

If you do not have a VNA or other suitable test equipment, Ed Wetherhold's article describes how he used a detector, signal generator and Return Loss bridge to tune the circuits.

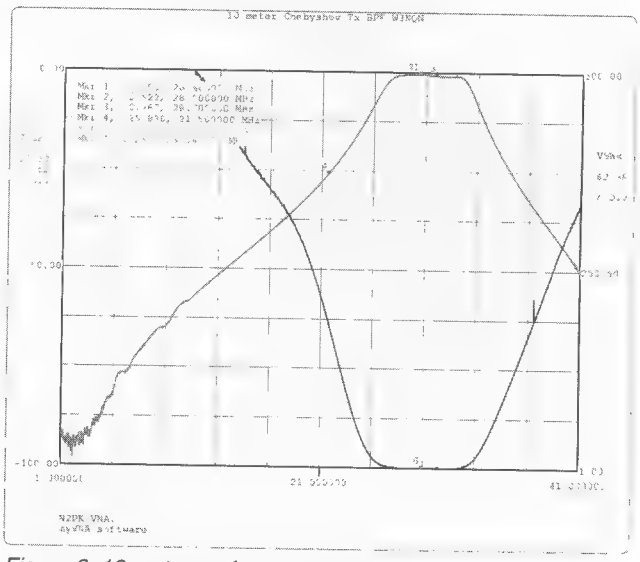

Figure 6: 10 metre performance plot.

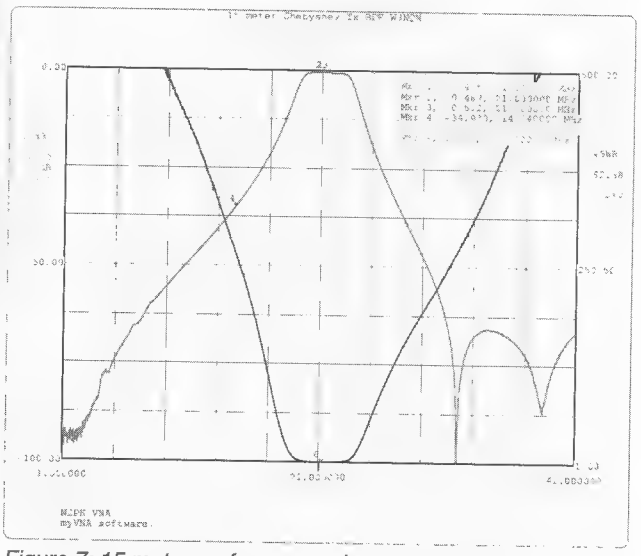

Figure 7: 15 metre performance plot.

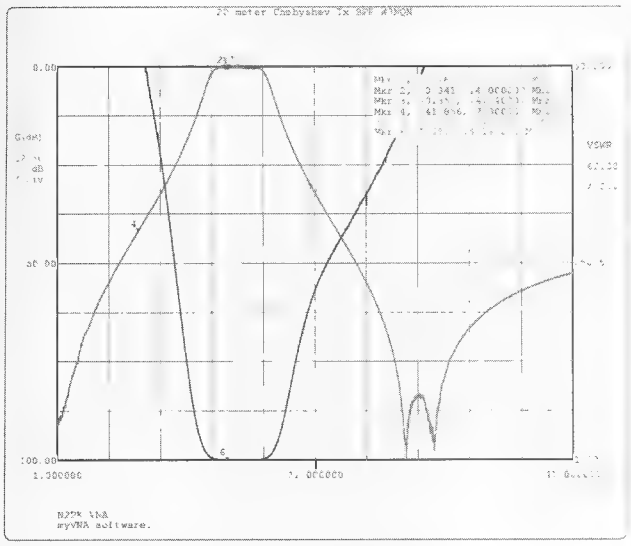

Figure 8: 20 metre performance plot.

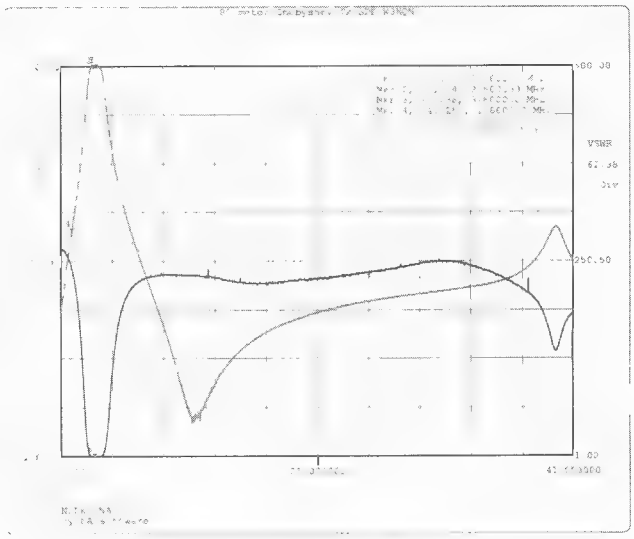

Figure 10: 80 metre performance plot.

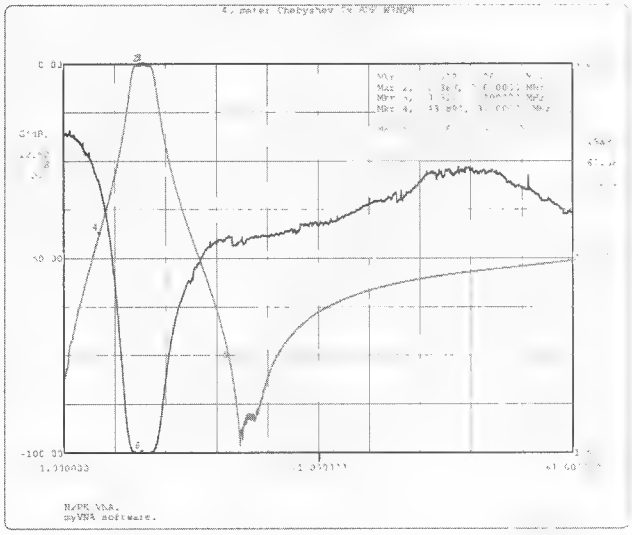

Figure 9: 40 metre performance plot.

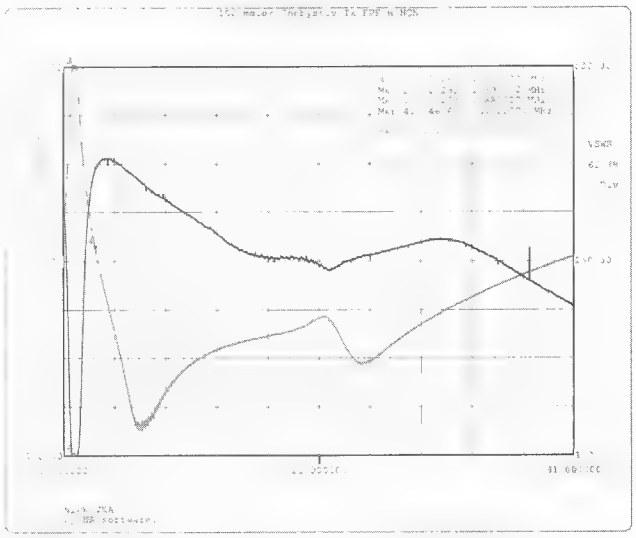

Figure 11: 160 metre performance plot.

References

1. Ed Wetherhold W3NQN BPF article, Clean up your signals with BPFs: *http://www.kitsandparts.com/W3NQN_May_June_1998_QST.pdf*
2. Ed Wetherhold W3NQN Receiver BPF article: *http://www.arrl.org/files/file/Technology/tis/info/pdf/990708qex027.pdf*
3. Bob Henderson BPF boards: *http://www.5b4agn.net, email: Bob@5b4agn.net*
4. Tab Components – Silver mica transmit capacitors: *http://www.tabmica.co.uk/page7.html*
5. W3NQN BPF Toroidal core Kit: *http://www.kitsandparts.com*
6. N2PK VNA: *n2pk.com*
7. myVNA Software: *http://g8kbb.roberts-family-home.co.uk/*
8. VNWA VNA: *http://www.sdr-kits.net/*

Continued on page 14

Plan NOW for the 54th JOTA 2011

The **54th Jamboree On The Air** will take place on ***15 and 16 October 2011***.

This year's theme is: ***Peace, Environment and Natural Disasters.***

Bill of materials

Reference		Part No	Quantity	Purchased from/comments
L1, L2a, L2b, L3		24 toroidal cores for W3NQN BPFs	1 set of 24	Kit and Parts dot Com
C1, C3	160 m	SHB-415 pF	2	Tab Components. *http://www.tabmica.co.uk*
C2,	160 m	SHB-250 pF	1	
C1, C3	80 m	SHB-370 pF	2	
C2,	80 m	SHB-155 pF	1	
C1, C3	40 m	SHB-120 pF	2	
C2,	40 m	SHB-60 pF	1	
C1, C3	20 m	SHB-85 pF	2	
C2,	20 m	SHB-35 pF	1	
C1, C3	15 m	SHB-43 pF	2	
C2,	15 m	SHB-14 pF	1	
C1, C3	10 m	SHB-29 pF	2	
C2,	10 m	SHB-12 pF	1	
BPF Board		PC Board – BPF - 5B4AGN	6	*Bob@5b4agn.net*
Magnet wire		1 mm enamel coated wire		Refer to Table 1 and this article
Magnet wire		1.5 mm or 1.25 mm enamel coated wire		Refer to Table 1 and this article
Connectors		PL239 four hole panel mount connector	12	Altronics S/No: PO509
Connector mount		M3-metal spacers threaded x 10 mm	24	
Connector mount		M3 metal screws x 6 mm	24	Spacer to PCB
Connector mount		M3 metal screws x 10 mm	24	Box/Connector to Spacer
Connector mount		M3-spring washers	48	
Box		Aluminium 70 mm x 70 mm x 170 mm	6	Home made

TET-EMTRON

Check out our new range of baluns at:- www.tet-emtron.com

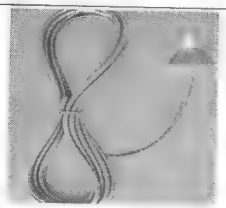
Base and Lead sets.

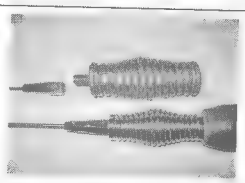
Codan Springs and Whips.

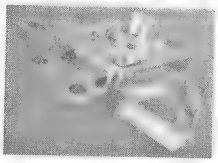
Mobile Mounts.

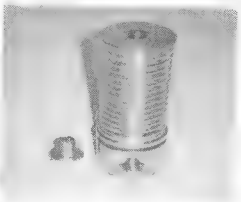
HF Base and Springs.

See our wide range of new mobile parts and products at:-
www.tet-emtron.com
TET-Emtron
80 Stock Road, HERNE HILL. WA 6056
Phone: 08 9296 3224

New ATW3040 HF + 6 metre Whip. Designed to be used with an Auto tuner (like the AH-4 or SG-237) for maximum efficiency. Made of fibreglass and coated with a tough flexible polymer finish. See the website or ring for more details.

The Townsville Amateur Radio Club (Inc)

Bringing Radio Technology To The World

MAIN VENUE
Charters Towers RSL Club
Function Room
8 Prior Street (cnr Hewett and Prior Streets)
Richmond Hill
LOCATION
20deg03.57min South
146deg 15.75min East
APRS Object NQARC

For full nformation contact
The Townsville Amateur Radio Club (Inc).
PO Box 333 Garbutt East,
QLD Australia 4814
Phone +61-7-47731196
email vk4wit@wia.org.au
http://www.tarc.org.au

The 20th North Queensland Amateur Radio Convention

September 16, 17 & 18, 2011
Charters Towers

The Convention will be hosting such diverse activities as:

- technical lectures.
- trade displays by manufacturers, dealers, and special interest groups.
- demonstrations of several facets of the hobby including
- Direction Finding, Computer enhanced communications and long distance communications.
- social functions including the famous TARC Mystery Pressie Auction.
- awarding the Ken Robertson VK4KT Memorial Award.
- display of self-made equipment, handicrafts and produce.
- future planning talks.
- tours to significant local features and landmarks.
- used equipment car-boot sale and monster auction.

tts systems

www.ttssystems.com.au
Phone: 03 5977 4808 Email: info@ttssystems.com.au

Your Australian reseller for:

BUDDIPOLE
LDG ELECTRONICS
spiderbeam
high performance lightweight antennas
Palstar
...America's Best!
TEN-TEC
VIBROPLEX

AVAILABLE NOW
Hard Drawn Copper Wire
Insulators, Dipole Centers
Open Wire Transmission Line
Spreaders, Kevlar Guy Line
Spiderbeam Fibreglass Poles
Baluns and Switches

SGC

Meanwell power supplies
Diamond products
Daiwa products
Technical books
Amidon products
Custom cables made to order

As always, you can get a free catalogue - just call!

See you at the Shepparton Hamfest 11 September 2011

VK6news

John Ferrington VK6HZ
vk6hz@wia.org.au

Photo 1: The new 20 metre beam.

Welcome to VK6news for September. So much has been happening here in WA. Firstly, congratulations to NCRG for another well organized and well run Hamfest. As always, a great turn out. A full report will follow in the next issue of *AR*.

What has been happening around VK6? Northern Corridor Radio Group (NCRG) has been very busy not only with planning a Hamfest but a stack of great projects.

A major revamp of the antenna installation is on its way. It all started with our 20 metre antenna having structural issues and being replaced by another high performance five element Yagi from TET-Emtron. Mark from TET-Emtron came to the rescue when the club needed a quick replacement in order not to be off the air for too long. An excellent antenna was put together by Mark and mounted on the 18 metre tower. The NCRG now has three big Yagis from TET-Emtron and is using these antennas with great success. Yesterday VK6ANC had a QSO with ST0R, from the 'new' entity of South Sudan. Check out the SWR across the band!

The rotator of our 15 metre antenna was swapped to a digital remote controllable rotator as a first step to a fully remote controllable station. We are trying out different concepts of remote control and are discussing the issues involved at this stage. It is not going to be solved quickly but is a major target for the next few years.

The current 80 metre broadcast antenna has been relocated to eliminate interference with some other gear and giving us better broadcast quality on 80 metres again. Currently we are running an interim solution with a 100 watt Icom and already have had some improvement over the old setup. At this stage we are dropping 30 metres as a broadcast frequency and will concentrate on 80 and 40 metres.

We also made room on a mast which was dedicated for the 2 metre beacon. A few organisational issues had to be resolved until this project could finally proceed. After Hamfest it is intended to mount the antennas at their target destination and work on the transmitter and computer behind it. This is well under way and will hopefully be working by the end of the year.

Hamfest is one week away at the time of writing this and we all look forward with anticipation. The NCRG decided to have a special offer for Hamfest this year for amateurs who would like to join the club. A reduced membership rate was offered for anyone signing up at the day of Hamfest. Also special junior memberships are available on request. The NCRG is looking forward to welcoming new members.

A new committee will be elected at this year's AGM on 14 August with a focus on more public relations work in the future. The NCRG is focused on growth and improving its offerings to the community.

And from the Hills Amateur Radio Group - HARG

The Hills Amateur Radio Group (HARG) is based in Lesmurdie and has a comprehensive website at www.harg.org.au The club can be contacted via secretary@harg.org.au HARG held their Annual General Meeting on Saturday, 30 July; a new, keen as mustard committee was elected for 2011/2012 and has already come up with some exciting ideas for the coming year.

President:	Onno Benschop VK6FLAB
Vice President:	Richard Grocott VK6BMW
Secretary:	Allan Wood VK6AN
Treasurer:	Alan Usher VK6PWD
Shack Manager:	Marty Martin VK6FDX
QSL Bureau:	Graham Rogers VK6RO
Publicity:	Bill Rose VK6WJ
Contest Manager:	Marty Martin VK6FDX
Technical Officer:	Heath Walder VK6TWO
Webmaster:	John Breen VK6FB

One of the first decisions of the new committee was to hold subscriptions at a very affordable $30 per year.

HARG will have a table at the NCRG Hamfest on 7 August where we will have available a range of items for sale plus information about Club activities for the coming year. An important addition to club meetings this year will be a series of talks of interest to amateurs at all levels of proficiency. Some subjects proposed are APRS, D-STAR, digital modes, EchoLink, IRLP, contesting, portable and mobile operation, computers in amateur radio, building simple VHF antennas, modern QSL systems, fox hunting, visits to repeater and broadcast sites and many more.

HARG would also like to welcome our latest members: Simon Hall VK6FBMW and John Trimmer VK6JAT.

Well done to all at HARG and we look forward to watching the club grow.

That's it from me this month. If you have anything that you would like included in the VK6news column, please email me *vk6hz@wia.org.au* 73.

Photo 2: The SWR curve across the 20 metre band on the new 20 m beam.

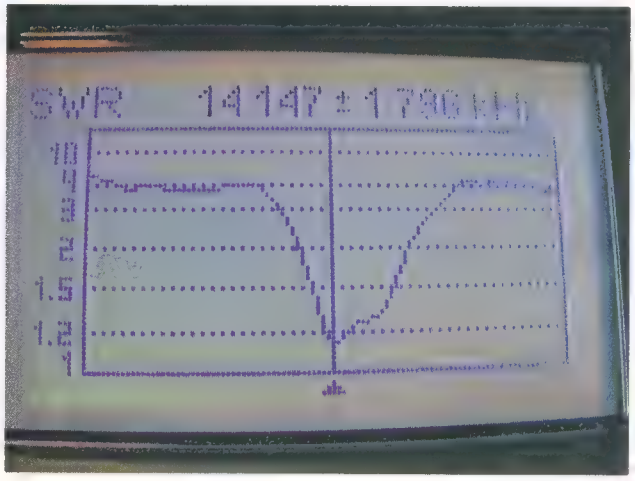

Your Electronic One Stop Shop

Jaycar Electronics - Better, More Technical

Hand-held Anemometer with Tripod Stand

Measure wind speed in feet/ min, MPH, km/h, metres/sec or knots. Also displays windchill, air temperature, current, maximum and average wind speed. Beaufort scale display and can be hand held or fixed to stand supplied.

NEW 2011

$69.95

- 0.64 to 107km/h
- Measures: 115(H) x 45(W) x 16(D)mm less stand

QM-1644

Briefcase Solar Charger

Convenient briefcase sized solar chargers for keeping a car battery topped up while on holidays or in storage. Three sizes for small, medium & large cars or 4WDs. Each terminates in a cigarette lighter plug or alligator clips.

From $39.95

12V 2W Charger
Dimensions:
Closed: 185(L) x 154(W) x 34(H)mm
Open: 304(L) x 185(W) x 17(H)mm
ZM-9036 $39.95

12V 4W Charger
Dimensions: Closed: 237(L) x 229(W) x 34(H)mm
Open: 445(L) x 237(W) x 17(H)mm
ZM-9037 $49.95

12V 7W Charger
Dimensions: Closed: 335(L) x 250(W) x 36(H)mm
Open: 492(L) x 335(W) x 18(H)mm
ZM-9038 $79.95

Multifunction Environment Meter with DMM

A multi-function environment meter that combines the functions of a sound level meter, light meter, humidity meter and temperature meter. Typical sound applications include checking acoustics of recording studios, auditoriums and professional hi-fi installations. See website for full specs.

- 4000 count
- Cat III 300V
- Dimensions: 170(H) x 78(W) x 48(D)mm

QM-1594

$99.00

Smart Powerboard with Energy Meter

NEW 2011

6 way smart power board with digital energy power board. One socket never switches off and one 'smart' outlet can be used for main appliances. When the main appliance is switched off it will then switch off other related items. LCD display shows energy consumption which is easy to use and simple to set up

MS-6152

$59.95

Digital Storage Oscilloscope

The advantages of a DSO gives you capabilities that simply aren't possible with any analogue oscilloscope, including trace capture, PC interface, storage of data on portable media etc.

MORE INFO AVAILABLE ONLINE

25MHz Dual Trace DSO
Ideal entry-level DSO for the advanced hobby user or technician and is particularly suited to audio work.

- Channels: 2
- Display: Colour TFT LCD 145mm
- Weight: 2.4kg
- Dimensions: 310(W) x 150(H) x 130(D)mm

QC-1932

Also available: **7" Screen 100MHz Dual Channel DSO** QC-1934 $1149.00

$599.00

To order call 1800 022 888
www.jaycar.com.au

Jaycar Electronics Better, More Technical

DX-News & Views

John Bazley VK4OQ
john.bazley@bigpond.com

By the time you read this edition, the new entity of **Southern Sudan**, ST0R, will have had a major DXpedition, multi band, multi station which should have ensured that all who 'chase' new entities will have managed at least one QSO! For those readers that would like more background information, Wolf Harranth OE1WHC, of Vienna's Documentary Archives has written an overview of Sudan's amateur radio history at www.dokufunk.org/sudan Well worth looking at.

On the subject of DXpeditions there has always been a lot of discussion on whether beams are really worth all the trouble, considering that, not only do you need the antenna, but also some form of support and means of rotating it. One can imagine that if you are in a 'hostile' environment it is no fun going out into a howling, freezing wind, to find out if the Long Path is open! The recent JX5O is a typical example, and I had hoped, before the closing date, to have had a photograph showing one of the operating tents and the beam! The alternative! Verticals, the antenna that has for many years been described as the antenna that radiates equally badly in all directions! But views, and results, have changed in recent years. Many years ago, Marty OH2BH, said that for an all-time new one, there should always be one station using a well installed vertical on 20 m operating round the clock. Then everyone had a chance, and you picked up the 'odd' propagation openings. I think the pros and cons for this have been illustrated quite recently with two DXpeditions. One operated by Nigel G3TXF to ZD7, rare on CW, who used verticals for 40 through to 10 and the ST0R operation that used beams on 20/17/15 and a vertical on 30 m. ZD7 should have been the hardest having, as far as VK/ZL was concerned, to operate on the long polar path, as Nigel had a high mountain behind him! On the other hand the ST0R operation should have been easier as it offered short path to VK/ZL. Up to the time of writing, a lot of VK/ZL stations have worked the ST0R station on 20 m, but only on the LP.

The station of Nigel ZD7XF: K3 transceiver, THP HL-550X amplifier, Big-IR Antenna controller for 40 m to 10 m, 12 V PSU, ETM-Paddle, laptop with WinTest and keyboard.

The Five Star DXers Association of 9M0C, D68C, 3B9C and 3B7C fame will conduct a major DXpedition to Kiritimati T32 - (Christmas Island, OC-024), **Eastern Kiribati** in September-October, 2011. A very large group of experienced operators from 13 different DXCC entities will be active as T32C, the requested callsign, on all bands and modes, with up to 16 stations on the air, using amplifiers along with monoband beams and vertical dipole arrays, 24 hours a day, for almost four weeks, including four weekends. The primary objective is to give as many DXers as possible a first contact with this rare DXCC entity and, as a secondary objective, to give as many band-slots as possible. At this time the organizers are seeking contributions from sponsors to help defray the very significant logistics cost of this DXpedition. Details on how to donate and further information can be found at *www.t32c.com*

Ron SV9/WB2GAI/P, will be on the air 29 August - 30 September, from **Crete.** He will be on Chaina Island, IOTA EU-015. As always, Ron will be on 80-10 m CW. He still has his logs for his 2001, 2005 and 2009 operations. U.S. stations should QSL direct, he says. DX stations should send via the bureau.

Randy N0TG reports the logs for the March, 2011 **Sable Island** DXpedition were uploaded to LOTW on Monday, 11 July. Logs/callsigns uploaded were: N0TG/CY0, K8LEE/CY0 and N1SNB/CY0.

Jacob Fields J28FJ, home call KB0ZIA, is an American working in **Djibouti** on the eastern 'Horn of Africa.' He has a Yaesu FT-857D and ATAS-120 portable type antenna. He will be making special QSL cards for his stay in Africa, he says. QSL to his U.S. address, KB0ZIA.

4W6A in **Timore-Leste** (East Timor) is an expedition planned for 16 - 26 September. See *http://www.4w6a.com* Bernd Langer VK2IA has joined the team, the seventh and final member. He will bring more CW strength to the team, plus much operating experience in previous DXpeditions. Col McGowan MM0NDX is joining the team as a pilot. Kev Haworth M0TNX of DX World, is joining as assistant QSL manager, assigned to get feedback to the operators while they are on Atauro Island. Reach him at *dxer59@gmail.com* The UK DX Foundation, RSGB DXpedition Fund, German DX Foundation, the Northern California DX Foundation, European DX Foundation, Nippon DX Association and Northern Illinois DX Association have joined as sponsors. Atauro is OC-232. Activity will be 160-10 m CW, SSB and RTTY. Please QSL direct with the standard guidelines, an SAE plus one IRC or US$2 or via bureau to M0URX. The log will be on LOTW as quickly as possible after the operation, or even while it's still going. There is a QSL request form on the website.

Craig Thompson KI0SO, and his XYL Dawn will be housesitting for A35A (Paul A35RK), in Ha'apai OC-169, **Tonga** starting 29 July. Craig will probably be there through May 2012 and will be taking 'new coax, a Force-12 C3S, and an M2 6 metre antenna'. Plans are to renew his A35CT licence and to be QRV on SSB and digital modes on 14 through 50 MHz. The QSL route is expected to be announced later this month.

P29FR in **Papua New Guinea** is Renzo I2KRR, volunteering technical support to the Catholic mission in Vanimo, on the north coast of the main island. Renzo was also active as 9J2FR from 1989-2000. In PNG, Renzo is working on improving antennas at the mission. He has an FT- 857 due to its light weight. For antennas, the materials available around Vanimo are wood and wire. He may build a quad, even a one-element loop. Presently the antennas are dipoles for all bands, 12 m high. He does not think he will be putting out the big signal he did at 9J2FR. His time available for radio is generally in the local evenings, plus Saturday and Sunday afternoons. Renzo's licence is 'full and unlimited' and he plans to be there until March 2012. His email is slow so he requests, 'Please, no heavy files.' Renzo is on 40, 20 and 15 primarily, SSB only. QSL via I2RFJ direct or bureau.

DX World.net reports Arnold WB6OJB is heading back to **Lesotho** where he will be operating again as 7P8JK from 15th to 22nd September. QSL via his home call.

Chris TL0A is currently back in France on leave until the beginning of August. His next stay in **Central Africa** will be from 3 August to 4 September, and again from 25 September to 31 October, or so. He will be QRV with 100 watts and a five element beam.

ZG3M is a special **Gibraltar** callsign for Mike ZB3M from 5-11 September to celebrate 'Gibraltar's National Day,' which is 10 September. QSL to the QRZ.COM address.

Jean-Pascal FY5LH (F5TND) will remain in **French Guiana** until 29 July, 2012. He is QRV on 7 through 28 MHz using a vertical antenna (DX77A) and active on PSK, RTTY and SSB. QSL via F5KDH.

Larry N0QM (ex VQ9LA) is on his way back to the **Philippines** for a three month stay. While there he will be QRV as DU3/N0QM using an FT- 450 and a 10 m tall vertical for activity on 7 through 50 MHz. He plans to put an emphasis on RTTY but will also be on CW and some SSB. QSL cards go via N0QM and will be answered in November, after he gets back home.

Phil F6GNT is now on **Mayotte Island** for the next two years. He told The Daily DX that his temporary callsign will be FH/F6GNT and that he has applied for a full FH callsign, which he expects to have within a few weeks. Phil tells us he will be operating on SSB only on all bands.

Gab HA3JB has received his renewed licence to operate in **Egypt** as SU/HA3JB from 1 September until 30 November. He plans to be QRV CW, SSB, RTTY, PSK and some SSTV. Gab was QRV in 2010 using the same call and prefers no dupes this year. Activity will be on 1.8 through 28 MHz. QSL via HA3JB.

Rob Hurd T6RH has chosen Buzz NI5DX as the QSL manager for his upcoming tour in **Afghanistan**. Rob leaves the U.S. on 20 August for Afghanistan, taking several days to get there. He will be there until 20 December and plans to operate mostly PSK and CW, with some SSB. He may call 'CQ NA' from time to time, looking for North America.

Take JG8NQJ/JD1 is now active from Marcus Island, **Minami Torishima**, OC-073. He will be on until mid-October, then return to Marcus in December. He has been on 30 and 17 m so far. Starting in December, he expects to be on all bands. QSL to his home callsign, either bureau or direct. Here is his address: Susumu 'Sin' Sanada, 5-17, 5-4, Shin- Ei, Toyohira, Sapporo 004, Japan. There will be an online log? *http://dx.qsl.net/cgi-bin/logform.cgi?jd1-jg8nqj*

And finally – at the 15/16 July ARRL Board of Directors meeting, 'The Board accepted a recommendation to change the name of the RTTY DXCC Award to Digital DXCC Award'.

Special thanks to the authors of *The Daily DX (W3UR), 425 DX News (I1JQJ)* and *QRZ.DX* for information appearing in this month's DX News & Views. For interested readers you can obtain from W3UR a free two-week trial of The Daily DX from *www.dailydx.com/trial.htm*

COM-AN-TENA

Australian made antennas setting a new standard

Co-linear 10/11 m vert 6 dBd	$270
10/15/20 3 el. ea band 1 coax	$680
Log-periodic 9 el. 8.4 m boom	$1194
20 m 4 ele boom 7.9 boom h/duty	$796
Log-periodic 7/30 13.7 m boom	call
15 m 3 el. 3.6 m boom	$314
M/b vert auto switch 10-80 m	$360
40 m lin load 2 el./cap hats	$670
6 m 5el. 3.6 m boom	$314
23 cm 36 el. 2 m boom N-conn	$249
70 cm hi gain Yagi 3 m boom	$170
2 m 10 el. hi gain Yagi	$190
Quad 2el. 20 m h/duty	$596
Quad 3el. 10/11 m h/duty	$494
10/15/20 vert with radials	$289
Rotatable dipole 40 m	$298

Guyed masts
13 or 21 metres

Winch up, tilt-over, aluminium and stainless steel three sided construction. Auto brake winches.

115 John Street
Glenroy VIC 3046

Phone
0419 542 437

VK2news

Tim Mills VK2ZTM
vk2ztm@wia.org.au

Amateur Radio NSW will be conducting a one day Foundation course at VK2WI in Quarry Road, Dural, advises Education Officer Terry VK2UX. It will be on Sunday, 11 September, 2011 commencing at 0830 hours. Would any readers who know of anyone wishing to utilize this course and assessment have them telephone 02 9651 1490 or 0400 445 829 and leave a message with contact details. At the end of the month, on 25 September, it will be the bi-monthly Trash & Treasure, licence assessments and home brew meeting. Les from ATRC has advised that he will attend with a selection of his wares. The July T&T was well attended on a fine winter's day. Four candidates sat and passed their assessments. The home brew in the afternoon had a wide range of show and tell along with various lectures.

ARNSW is pleased to advise that Life Member Pierce Healy VK2APQ reached his 100th birthday on Sunday, 14 August last. There was a family arranged function which many amateurs attended. Pierce was much involved with the NSW Division of the WIA in the late 1950s into the 1960s before he became the contributor of the amateur radio notes in Radio Television and Hobbies. WIA Historian Peter VK3RV has prepared a story about Pierce for this issue. ARNSW is planning a BBQ at VK2WI on Sunday morning, 4 September with an invitation for all to attend. Details will be advised on the VK2WI News broadcasts.

The **Oxley Region ARC** will be celebrating the 40th anniversary of the club on Sunday, 2 October 2011. The Club was formed at a meeting at the Port Macquarie home of Owen Bested VK2AEB (SK) on Saturday afternoon, 2 October, 1971. The 2011 celebration will be in the form of a lunch at the Port Macquarie Golf Club in Ocean Drive - at the southern edge of Port Macquarie as you head down the coast towards Laurieton. The lunch time gathering will allow many out of town attendees, as well as the locals, to get home in daylight and with this in mind an invitation is extended to all amateurs on the mid north coast and beyond to attend. October is also the final month of operation of special event callsign VI40BOR, which the Club has for the anniversary. You can find more in this month's edition of Oxtails, the Clubs newsletter which can be read at www.orarc.org ORARC held their AGM last month.

WICEN (NSW) Inc has a new postal address from the end of July. It is Box 535, Regents Park DC, 2143. Early this month (September) they will be conducting their AGM. Location and time will be notified to WICEN members as well as via VK2WI News bulletins. This month they have operations in the Trek for Timor, on 24 September, and in October the weekend operation with the Hawkesbury Canoe Classic. For this they require operators for the various checkpoints as well as help in the set up and pull down tasks surrounding the event. The HCC is a major fund raising event for the Arrow Bone Marrow Transplant Foundation, a small charitable foundation that raises money for leukaemia research and provides support to people undergoing leukaemia treatment. WICEN Sydney North held their AGM on Sunday, 24 July. At this meeting there was a change in several positions. The new Regional Co-ordinator is David Harvey VK2DMH and new Secretary/ Treasurer Leah Heggie VK2FREE. Barry White remains Liaison Officer with the region's emergency planners and Julian Sortland VK2YJS remains Deputy RCO. The Regional Committee thanks John Vetters VK2JV for his work as RCO and Neale Imrie VK2CNI for his many years of service as Secretary/ Treasurer. Contact WICEN via email at *operations@nsw.wicen.org.au* or the web site *www.nsw.wicen.org.au*

There is a lot of activity in this month of September with the clubs – it must be spring – the **St. George ARS** will be conducting the annual Bill Shakespeare Memorial auction on Saturday, 17 September at their meeting venue, the Kyle Bay Scout Hall. **Waverley ARS** have a Foundation weekend on 11/12 September. Contact via *education@ vk2bv.org* **Illawarra ARS** will be holding their annual picnic, BBQ and foxhunting at Blackbutt Reserve on Saturday, 10 September. The Crystal Set competition entries close in November. Check out their URL at www.iars.org.au **HADARC** have assessments planned for 1 October. Details at www.hadarc.org.au They can also be found on Facebook and Twitter by a search for VK2MA. **Fishers Ghost ARC** advise of a new web site to be found at *www.fgarc. net* They meet at various locations round Campbelltown on the last Wednesday evening of the month, advises Ian VK2MCI, their Publicity Officer.

The **Walcha Radio Group** is a small group of eight with several repeaters under their supervision. They conducted a fund raising operation with New England amateurs as Jeff VK4XJJ walked through their region on his trek to the Indian Ocean from the east coast. This is Jeff's second walk that he has done for NETS. They would like to thank all who donated to Jeff's Walk.

The **Manly Warringah RS** has a grant for prospective amateurs under the age of 18. Check out *www.mwrs. org.au* They meet every Wednesday evening at the 1st Terrey Hills Guide Hall, Beltana Ave, Terrey Hills. Directions on their repeater 146.875 if needed. Twitter fans can follow the Society with news and events at *twitter.com/vk2mb*

Port Stephens ARC conducted a Foundation weekend class in June, advised Leigh VK2KAL which

resulted in four new amateurs for their region. Congratulations to Bruce VK2FKNN, Jarrod VK2FZRO, Stuart VK2FOOO and Tony VK2FACK. The Club meets on the first Sunday of the month at 10 am at the Marine Rescue building, Whitbread Drive, Lemon Tree Passage. You can find out more at portstephenarc.org or from the President Richard VK2FRKO on 02 4982 4951.

The **Blue Mountains ARC** had WINTERFEST at the end of August. They conduct an HF net on Tuesday at 2000 hours on 3543 kHz. Then there is the two metre net on Wednesday at 1930 hours on VK2RBM 7050 which requires a 123 Hz tone. Check them out at *www.bmarc.org*

Summberland ARC held their SARCFEST early in August.

Amateur radio has been receiving wide ranging mention through Column 8 in the Sydney Morning Herald. Two regular contributors are Richard VK2SKY and Dave VK2KFU who are often able to respond to technical topics raised. Richard did well late July when a contributor inquired why the car radio on the morning trip to work could only receive ABC AM stations, yet in the afternoon all Sydney stations AM and FM could be heard. Richard got a reply in with a possible explanation but continued by saying he would refer the problem to members of the **Manly Warringah RS** at their weekly meeting. A few days later Richard again reported that he had conferred with his colleague Mark VK2XOF who was the **VK2WI** station engineer. Mark thought that the problem could have been water getting in overnight to the car's antenna or preamp used in some models which dried out during the day, only to have the problem return next morning. Richard concluded by saying he had referred the problem to his **MWRS** members who responded with lots of opinions. While to some readers it would have gone over their heads, others may have picked up on the amateur radio mention. So without directly requesting publicity we may have gained some. Thanks Richard. Keep up the contributions.

73 – Tim VK2ZTM

VK3 news Amateur Radio Victoria News

Jim Linton VK3PC
www.amateurradio.com.au
arv@amateurradio.com.au

Centenary activities galore

The next opportunities to gain the prized ten bonus points toward the operating award are available during October and November. Listen for VK3WI to be active during the Oceania DX Phone Contest on 1/2 October and the nominated special callsign VK100ARV throughout November, the latter to be activated via a roster of members.

Already the callsign VK3WI has been very active on the Remembrance Day Contest and the International Lighthouse and Lightship weekends, with each valid contact earning ten points.

The rules of the Amateur Radio Victoria Centenary Award have been posted on the website under the Award section. Basically throughout the celebratory period of 1 August through to 30 November, logged contacts with members are worth two points for valid contacts, and on three occasions ten bonus points can be gained.

While VK stations need 100 points to qualify, DX stations only require 25 points. To see the full rules and update reports visit the website.

The Centenary also involves the world's first DATV QSO Party from VK3RTV and across the world. By accounts the program for this event were set to go well including through the streaming media portal of the British Amateur Television Club and the Amateur Television Network and the USA.

The weekend of 19/20 November has become a special focus for the Keith Roget Memorial National Parks Award. Already four amateurs are registered to be a National Park station, the contact to do so being Tony Hambling VK3VTH, *vk3vth@amateurradio.com.au*

End of HF broadcasts

The high frequency outlets for the Sunday broadcast through VK3BWI have been suspended due to loss of the usual venue that housed the remotely controlled transmission equipment. When the use of the venue ended recently the equipment and commercially made antennas for 80, 40 and 10 metres were stored away while further deliberation was made on the desirability of having the facility.

The Sunday 10 am broadcast, which originates from VK1WIA, will continue to be heard through the VK3RMM Mt Macedon and VK3RML Mt Dandenong two metre repeaters as well as VK3RMU Mt St Leonard on UHF.

Foundation classes

Enrolments are now open for the quality training experience on 10 and 11 September that is available at 40g Victory Boulevard, Ashburton.

The weekend begins at 9 am on the Saturday for instruction, which finishes around 4 pm, then back at 9 am Sunday for some revision, whereby the written and practical assessments are held.

To enrol or obtain more information contact Barry Robinson VK3PV 0428 516 001 or *foundation@amateurradio.com.au*

VK3news Geelong Amateur Radio Club - The GARC

Tony Collis VK3JGC

Photo 1: View of the Signal Tower from the road.

Photo 3: The Presidents of the GARC and the GRES: Tony VK3JGC and Bill VK3YTH.

VHF / UHF Field Day

The VK3ALB/P established field day team participated in the 2011 Winter VHF/UHF Field Day weekend. The operators were Lou VK3ALB, Jenni VK3FJEN, Michael VK3FMIC, Peter VK3APW and Nik VK3BA. The location chosen was the original Point Henry Signal Station, grid locator QF21fu, near the Alcoa plant at Geelong; they operated out there for 24 hours. Access to the building was courtesy of Alcoa and Jim Friend VK3VBC.

All bands were worked from 6 m through to 10 GHz. Significant distances were worked on 2 m (275km to Wangaratta), on 70 cm (275 km to Wangaratta) and on 23 cm (398 km to Wagga). All other contacts were within 100 km on all bands. Despite the poor weather and the small number of stations available, they rated it an overall excellent weekend.

Solstice Dinner

This year it fell to the GARC to host the *Winter Solstice Dinner* at their club house, with invitations extended to members' wives and partners and the Geelong Radio and Electronic Society, the GRES.

The Dinner was arranged by Jenni VK3FJEN and Vanessa VK3FUNY, in liaison with the GRES. As is the custom at these events, those attending brought food and drink to share with the other attendees. At the conclusion of the "eatfest", the guest speaker Mike Trickett VK3ASQ gave a talk in the presentation room.

Mike, who was President of the GARC five times between 1963 and 1982, talked about his experiences during his long association with the Club. The talk was very interesting, holding the audience's attention, and also being a revelation for newer members, that currently enjoy the premises and facilities, without realising some of the issues that prevailed in the club's early history. Mike is a life member of the GARC. At the conclusion of the presentation Secretary Jenni VK3FJEN presented Mike with a GARC cap as a gesture of thanks.

Photo 2: Jenni VK3FJEN operating.

Photo 4: Guest speaker Mike Trickett VK3ASQ.

VK4news

Paul Beales VK4XPB

Central Highlands ARC AGM Weekend – from Gavin VK4ZZ

The famous and popular Central Highlands Amateur Radio Club AGM weekend at Camp Fairbairn near Emerald will be held from Friday, 30 September, at 3.30 pm to midday Sunday 2, October 2011.

The basic costs are the same as last year, that is, $13.20 per person per night or $6.60 for day visitors.

Caravaners please book into Lake Maraboon Holiday Village, as soon as possible.

CHARC secretary Gordon VK4KAL needs to know from you if you are attending to allow catering for the acclaimed Saturday Night Gastronomic Feed Up.

Find out more by:

- contacting Gordon on *vk4kal@wia.org.au*
- search for Central Highlands Amateur Radio Club on Facebook
- go to the CHARC Yahoo page at *http://au.groups.yahoo.com/group/charc/*

The Sunshine Coast Amateur Radio Club's annual HAMFEST – from Richard VK4RY

SUNFEST 2011 is an event for amateur radio operators, CB radio users, radio and electronics enthusiasts, with computer bits and pieces also available. New gear as well as pre-loved bits of everything will be on sale.

Doors open at 0900, Saturday, 10 September, 2011. Sellers entry will be from 0700. The location is the Woombye School of Arts, Blackall Street, Woombye. (UBD Map 66 F12).

For reservations for table space contact Richard Philp VK4RY on 07 5492 9898 or mobile 0417 366 773, or via email: *vk4ry@wia.org.au* Tables are $20 each, which includes two persons. Entry fee is $5.00 plus $2.00 for each additional family member.

Wide Bay Hamfest 2011 – from Dawn VK4FTBA

16 July was chosen by the Maryborough Electronics and Radio Club for its third annual Hamfest. Last year the event was run later and in conjunction with the VK100WIA operation.

This year, the catering for the Hamfest was done on behalf of the local scouts and the warm drinks and food were appreciated by many. Murphy seems never to be far away and it was no real surprise when the midweek weather forecast said rain for Saturday. Friday evening saw a small contingent from MERG do the basic set-up of the Scout Hall and on Saturday the finishing touches were completed before the doors opened to some anxious bargain hunters.

Apart from the donation of a dual band H/T for the raffle, David from VK4-ICE Communications had donated a two metre antenna for the permanent JOTA station at the Aldershot Scout Camp. This is the 3rd year that David and XYL Cheryl have attended the Hamfest and the support of this business is very much appreciated.

Amateurs from the Wide Bay areas of Bundaberg, Gin Gin, Hervey Bay and Maryborough were supported by visitors from Gympie, Sunshine Coast, Kingaroy, Brisbane and a sole VK7. A range of brochures was supplied by ICOM Australia and at the end of the day there were many less to put away than had been put on the table.

Various pre-loved items found new homes and the VK4-ICE table always seemed to have people around. Just to round off the day, our training and assessment team of Kathy VK4KJ and Ray VK4TPT ran an assessment for a visiting amateur. The local newspaper sent their photographer and the event has helped to spread the word of amateur radio.

Biography: Peter George VK4FZAB - From an article in 'TrecNews' ex VK4DMC

I was born in Adelaide in 1922. After leaving school aged 14 in the depression I obtained my first job as general dog's body at a radio repair business called Brisbane's Radio Ambulance. My pay was twelve

Photo 1 - Peter VK4FZAB

shillings per week ($1.20). This business would travel to any home in the metropolitan area and repair the home radio for five shillings plus cost of parts. This was generally a glass valve.

At 14 I put my age up to 16 and joined the senior cadets until I was able, two years later, to join the CMF. At the true age of 17, I enlisted in the 2nd AIF as an infanteer. Having been a clerk at Myer, I was asked by Signals if I would like to be a wireless operator. When I found out that I would get a peak hat instead of a slouch hat, plus light-heavy boots for driving a wireless vehicle, my fate was sealed!

I was put into 7th Div Signals and after six months of learning the Morse code, semaphore flags, Aldis lamps and heliograph, my section was attached to the 2/5th Field Regiment (Sir Arthur Roden Cutler VC's unit). We travelled in 1940 to India on the Queen Mary. Then it was on to Palestine, the Western Desert and Syria. After returning home and given seven days leave for nearly three years overseas duty, we did the landings at Milne Bay, Buna, Sanananda, Lae, Morobe and Finschafen.

I returned to Australia, married and was promoted to Corporal. I was then seconded as Corporal wireless operator to an RAAF unit, No. 4 Mobile Meteorological Unit who collected data from radio stations around Asia and the Pacific. In addition to being the Met office for the 7th Division, they released gas-filled balloons every few hours and tracked their path and flight with a theodolite. This information indicated the winds which affected the aim of 25 pounder gun-howitzer shells, which had a high trajectory.

I vividly recall the evening of the Japanese surrender. To celebrate, we released our biggest 1.8 metre (6 foot) diameter balloon under which was suspended a huge blazing bundle of rags and cotton waste. When this fire-ball was floating across the Borneo jungle it attracted all sorts of fire from the celebrating troops. Machine-guns firing tracers, Bofor guns and search-lights all joined in until our fireball eventually sank somewhere in the Borneo jungle.

After discharge I was employed in my wife's family refrigeration business. We then travelled to Cairns where I worked in refrigeration and then to Darwin. After several jobs in the NT I joined the NT Police Force. When the Korean conflict started, I re-enlisted, got my war-time rank (Cpl) back and subsequently made commissioned rank. I served two tours in Korea with 3 RAR and before I took up my new Australian job as 2 I/C Canungra Jungle Training School, resigned my commission as Captain and, after a few more interesting jobs operating a large health business on the Gold Coast and a photographic shop in Cairns, retired.

After a further 20 years of 'hobbying', I decided to re-learn my Morse code and become a 'Ham'. I am now a Foundation Licence operator and at 88 wonder what might be next.

VK4news Radio communications vital for state rally event

Les Unwin VK4VIL

Photo 1: One of the repeaters commissioned. L to R: Dave VK4FWDM, Les VK4VIL, Mike VK4LMB and Leon VK4KLL.

Recently, the Rockhampton and District Amateur Radio Club (RADAR) continued their annual collaboration with the Central Queensland Motor Sporting Club, providing communications for round two of the Queensland Rally Championships held at the Capricorn Resort near Yeppoon, in central Queensland.

On the day, twelve operators from the club completed field relay of information as well as conducting emergency communications for accidents, injuries and recoveries. Youngest radio operator on the day was 16 year old Cory Pedder VK4FCMP, now a veteran of three rallies.

This year, three courses up to 26 km in length were utilized within an overall area of approximately 300 square kilometres and vehicles completed a total of eight events.

To avoid confusion, it was decided to set up two radio bases, with the headquarters in one of the Capricorn Resort buildings and a remote base controlled by John VK4AJS.

Leon VK4KLL, at the resort's headquarters, was kept particularly busy on four radios, a VHF frequency, one WICEN UHF frequency and two UHF CB channels, as well as coordinating with the Clerk of the Course and the Scorekeeper.

Although some operators worked in relatively comfortable conditions others, including Len VK4WAL, Bruce VK4VRO, Dave VK4FWDM, Marcel VK4TMH , Jim VK4JYM and John VK4AHB were in isolated conditions and subjected to a bit of precipitation and wind during the day, but are keen to return.

Photo 2: Mike VK4LMB station set-up. No, Mike did not build this – it is normally used as a bird viewing station.

Photo 4: Work for the communications and recovery vehicle.

It was great to see our newest recruit, Rod Cecil, who was previously involved in car racing in the 70's, operating UHF CB 1 channel at the start of the stages. Rod bumped into some of his old mates during the event.

As VHF and UHF bands were required in the hilly and heavily wooded terrain, headquarter and repeater stations were built and activated the day before the event.

With the course classed as very slippery, bingles were common and only 16 of the initial 28 cars entered remained operational at the completion of the event. Luckily no major injuries occurred. Overall conditions and incidents provided good emergency training and although transmissions were kept concise, radio communications were virtually continuous for a 12 hour stint.

To allow early results to be collated in time for the dinner and presentations, operators were busy between other tasks, reporting all result times for the several stages over each of the three courses.

During the dinner, the motor sporting club acknowledged the RADAR club's operations as professional, and certainly essential for the conduct of the event. Of particular interest to the organizers was the construction, operation and worth of the repeater stations.

Congratulations to RADAR Club President Mike VK4LMB and Clive VK4ACC, who were heavily involved in preparations.

Already there is an undertaking for continued collaboration in 2012.

Photo 3: Leon VK4KLL, in front, and Ross, Clerk of Course at Rally HQ.

Spotlight on **SWLing**

Robin L Harwood VK7RH

Well Spring has arrived and hopefully the propagation will have improved, particularly on the higher bands. More broadcasters are rapidly exiting shortwave for the Internet and even more gaps are appearing within the broadcasting allocations. Monitors are reporting the increasing presence of smaller domestic senders, who have often been masked by the huge international broadcasting outfits. Some are telling me that they are hearing Brazilian stations yet there seems to be a dead spot for me. One Brazilian is reportedly easy to hear on 15190. It is R. Inconfidencia but I have no idea where it is yet; it is also reportedly on other shortwave channels. Many of the shortwave senders from Brazil relay networked programming from Rio or Sao Paulo although commercials are often local and may give some indication where the sender is located.

The exodus of shortwave stations does not seem to be worrying the Chinese as there seems to be either CRI or one of the domestic networks easily heard around the clock. They also don't seem to like other countries or broadcasters broadcasting into China in the standard language or in local dialects. As a result they jam programming by blanketing channels with programming from domestic networks. One trick is to have two or three senders co-channel yet each will have delayed audio giving a deliberate echo effect. Some clandestine broadcasters get the Firedrake treatment.

This is the name given to a continuous program of traditional ethnic music with emphasis on percussion instruments. Lately Firedrake has appeared on higher channels, including one reserved here in Australia for VMC in Charleville for WEFAX charts. 13920 suffers from 1300 UTC and apparently the clandestine sender said to be based in Taiwan has popped up on this channel and is immediately drowned out by the Firedrake senders in various locations within the PRC. Sometimes the Firedrake jammers are switched off, usually on the hour for about five to ten minutes, revealing the weaker clandestine sender.

The station located in Myanmar, formerly called Burma, has returned to 7185.7 and is audible easily because it operates within the exclusive amateur allocation on 7 MHz. One never knows from day to day what will happen, as the sender can sometimes pop up on 7200.05. Lately it has been signing off at around 1230 which seems to be the time of the local sunset. A second station is on 5986 but is often buried beneath a Japanese-backed clandestine broadcasting to North Korea. The latter is mainly in Japanese yet does have occasional notices in English. These notices are about the unknown number of Japanese who have allegedly been abducted by North Korea.

You will probably have encountered some OTHR pulses as you monitor the bands. In the 70's and 80's we had the Soviet Woodpecker, which used to wipe huge chunks of the spectrum. This was located in the Ukraine, not far from the infamous Chernobyl nuclear power station. Not long after the Chernobyl accident, this signal disappeared. Lately we have heard a softer OTHR pulse usually in 30 kHz segments yet thankfully not within amateur allocations. Some monitors are claiming to have located the source to be at Akotiri in Cyprus, at a NATO base. In mid-July there was a huge explosion at a power station as a result of seized Iranian ordnance catching fire. This resulted in serious damage to the power grid especially for the BBC Cyprus relay at Zygi. Programming had to be hastily relocated to other senders until power could be restored. The power outages also seem to have affected these Akotiri OTHR pulses.

Well that is all for now. Don't forget you can email me with news and comments to *vk7rh@wia.org.au*

73

GippsTech 2011

Peter Freeman VK3PF

The Eastern Zone Amateur Radio Club (Inc) thanks all who made our recent GippsTech 2011 event another success. We had over 100 amateurs present and around ten on the partners' tour. We had only one minor issue – our planning for the partners' tour was incomplete. We give Dean VK3NFI hearty thanks for accepting the challenge of driving the minibus for the two days. From what we heard back from the ladies, they had a great time.

Roger VK2ZRH has provided a thorough report elsewhere in this issue. All of the presenters deserve special thanks for their contributions.

The Club also thanks the following for their donations to the raffle: Graham VK3XDK, Chris VK2DO, Icom Australia, Alan VK3XPD, Doug VK3UM and the other contributors. 21 prizes were distributed, with Jenny VK3JEN clearly delighted in winning the FT-2900R transceiver. Stephen VK3FSJW will need to upgrade soon if he hopes to use the 2.4 GHz transverter kit he won. Transverter kits also went to Ralph VK3WRE (3.4 GHz) and Andrew VK1DO (10.3 GHz).

The dates for next year are July 7 and 8 – pencil them in the diary now.

VK7news

Justin Giles-Clark VKTW
Email: vk7tw@wia.org.au
Regional Web Site: http://groups.yahoo.com/group/vk7regionalnews/

Photo 1: Martin VK7GN in the Shack (Courtesy of ABC Collectors).

It was great to see the ABC Collectors program feature the QSL collection of Martin Luther VK7GN on 29 July. This was not only a great promotion of QSL card collecting but it was a fantastic promotion of the hobby of amateur radio. Thanks to Martin and the ABC.

Winston VK7EM is looking for historical information on the Green House at Stanley in the far NW of VK7. From 1939 to 1966 the PMG operated a radio telephony station at Stanley, known as The Green House. It acted as a back-up to the only submarine cable to Victoria at the time and operated around 40 MHz to a station at Tanybryn, near Apollo Bay in VK3. If you have any information then please contact Winston at email: *wnickols@westnet.com.au*

David VK7YUM lets us know that from 3-7 November, 2011, King Island is celebrating the 150th anniversary of the Cape Wickham lighthouse that has operated continuously for 150 years.

The King Island Council is organising a week of celebrations around the island and has invited radio amateurs to join them in the celebration of this notable maritime sesquicentenary. If you are interested then take a look at the website for contact details: *http://www.kingisland.tas.gov.au/*

There was a respectable contingent from VK7 at the annual GippsTech technical conference in VK3. It included Rex VK7MO, Joe VK7JG, Peter VK7PD and the author. As always this was a fantastic event with many interesting presentations about the 'bleeding edge' of microwave and radio experimentation. The author stayed on in Melbourne and caught up with Mal VK3FDSL and Dianne VK3FDIZ at the WIA Bayswater office and thanks both for their hospitality. The author also attended the morning social meeting of the Moorabbin and District Radio Club and thanks to all who made me feel very welcome, especially Noel VK3BMU.

VK7 Repeater News

Hayden VK7HA and Michael VK7FMRS have tracked down the interference on VK7RCH, Grey Mountain; it appears to be caused by a 'remote' operated boat crane operating on 433.575 MHz. By the time this goes to print it, hopefully, will have been resolved. There is a digipeater also planned for this site so, watch this space! The batteries have been replaced on VK7RBH on the snow covered Ben Lomond thanks to Joe VK7JG, Ian VK7IH and Errol Williams from Alpine Enterprises who supplied the snow transport. At the time of writing the weekly broadcast repeater VK7RIN on Barren Tier is still undergoing some TLC!

Northern Tasmania Amateur Radio Club

The NTARC meeting on 13 July saw a keen band of radio amateurs at the soldering and desoldering workshop. NTARC meets in the wonderful facilities of the Alanvale Campus of the Skill Institute and this does have many advantages including tools, workbenches and expert instructors! A big thank you to Peter VK7KPC, Idris VK7ZIR, Peter VK7PD and David Welland.

Advanced notice is given of Northern JOTA arrangements from Peter who is NTARC JOTA Coordinator. JOTA in the North will be held on Sunday, 16 October at the Kings Meadows Scout Hall, from 10.00 am. Setup is on Saturday so if you can spare some time it would be much appreciated.

Cradle Coast Amateur Radio Club

23 July saw CCARC focus on Squid Pole antennas at their monthly meeting. David VK7DC lets us know that there was a great roll-up with three different versions of Squid Poles being demonstrated and

tested on the lawns. Thanks to Peter VK7KPC and Winston VK7EM with their vehicle mounted versions and Dion VK7DB for his lawn mounted version. CCARC make a huge contribution to the International Lighthouse and Lightship Weekend each year and 2011 is no exception. At Mersey Bluff lighthouse will be Winston VK7EM and Scott VK7NWT. At Table Cape lighthouse will be Eric VK7NFI and Wayne VK7NET, and Dion VK7DB will be doing a first time activation of the Sandy Cape lighthouse.

WICEN Tasmania (South)

On 24-25 June WICEN South members, CCARC members Dave VK7DC and Ross VK7RW, and NTARC member Peter VK7KPC converged on St Helens to supply communications support for an equine endurance ride. The 2012 Tom Quilty National Championships are being held in St Helens and so these events are dress rehearsals for the championships. WICEN are looking for more communications volunteers as support will need to be scaled up for the championships. If interested in helping then contact the WICEN committee and their details can be found at: *http://tas.wicen.org.au/*

Radio and Electronics Association of Southern Tasmania

Congratulations to Paul Kirby for successfully passing his Standard assessment and Theo Klop VK7FTAK who passed his foundation assessment. We look forward to hearing you both on the air. Sunday, 4 September is the date for the REAST Car Boot Sale. So, bring along your items and turn them into cash. There will be a BBQ throughout the day. Starts after the VK7 Regional News broadcast on the Sunday.

6 July was the REAST monthly presentation and it was a wonderful 'random walk' from Mike VK7MJ titled the three 'Rs' – 'Resonance, Reactance and Resistance'. Mike started with resistance and Ohms Law and then gradually added the concept of alternating current, then capacitors are added to the circuit, then inductors, creating resonance and reactance, add in transformers, the concept of Q, and finishing with some RF examples of all these in band pass networks. A big thank you to Mike who put hours and hours into this presentation and it was very much appreciated.

Photo 2: Mike VK7MJ during the 'Resonance, Reactance and Resistance presentation'.

The Wednesday DATV nights are going strong with a distinctly hobby robotics feel to them. Mobile motorised platforms, Arduino and TI microcontrollers, Arduino shields, motor control circuits, sensors, iBots, solar radio astronomy, tour of GippsTech 2011 and WIA offices and Paul VK7PAH with his recently purchased Funcube Dongle SDR radio. As you can see we get up to all sorts of things, why not come along and join in. See you there.

John McCulloch VK7CCC - SK

It is my sad duty to inform you of the passing of my very good friend and fishing buddy, John McCulloch VK7CCC.

Only days before his crippling stroke that left him paralyzed and unable to speak, his daughter gave birth to his first grand children, a beautiful set of twins, a boy and girl.

Our thoughts are with his wife Joan, son Colin and daughter Palentina. Tight Lines John.

Contributed by Joe Gelston VK7JG.

Alan Mouzon VK3BUM - SK

My long term radio and internet buddy, Alan Mouzon, lost his battle with cancer last Sunday, 5 June, just a few days before his 77th birthday. Several VK7 amateurs will remember Alan and the conversations we used to have about Flight Sim and other subjects. A memorial service was held for Alan in Kilsyth, Melbourne on Friday, 10 June, 2011. Condolences were passed on to Nora, his widow, on behalf of his Tasmanian friends. Keep flying my friend.

Contributed by Mike Jenner VK7FB.

Clifford Victor de Plater VK7CD - SK

The Northern Tasmanian ARC is sad to report the passing of one of VK7's most senior amateur radio operators, Clifford Victor de Plater VK7CD, on 29 June, 2011, just 29 days short of his 99th birthday.

Cliff had moved to Tasmania to live with family on a tourist host farm at Lilydale some years ago. He had previously lived at Narrawallee on the NSW south coast, following retirement in 1979 from a long and very distinguished career as a botanical scientist with the CSIRO in Canberra. Prior to his CSIRO career, Cliff had served during World War 2 with the RAAF.

While failing health and mobility had much reduced his activity of late, Cliff had been interested and involved with radio and electronics from boyhood. He had long enjoyed his amateur radio hobby, both in VK1 and VK2; and over the past few years had re-equipped his station to mark its return on air, from his new VK7 QTH at Lilydale.

His passing leaves a wide circle of on-air acquaintances, all of who will miss his friendly voice and readiness to engage in discussion on many subjects but none more deeply than those touching his scientific training. Our sympathies are extended to Cliff's wife Hazel and family.

Contributed by Yvonne VK7FYMX, NTARC Inc. Secretary.

VK3news East Gippsland Radio Group (EGRG)

Rob Ashlin VK3EK, President EGRG

From L to R: Ralph VK3FRJK of Newmerella, Peter VK3PRF of Bairnsdale, Keiran VK3BTV of Melbourne, Gerard VK3GER of Melbourne, Bernardita and Eckie of Bairnsdale, John VK3MGZ of Melbourne, Rob VK3EK of Bairnsdale, Jim VK3UFO of Melbourne, Peter VK3NPI of Boolara, George VK3QP of Melbourne, John of Traralgon and Mike VK3XL of Melbourne.

The East Gippsland Radio Group VK3EG relived its Annual Winter Classic Camping Trip at Moscow Villa in the mountains near Swifts Creek on the last weekend of July, 2011. This camping weekend evolved from a number of the amateur radio operators who provided emergency communications for St. John Ambulance Brigade in the Omeo Winter Classic during the 1990s.

The Omeo Winter Classic may be long gone but the challenges it brought still remain and continue in the heart and spirit of this radio group. The group's objective of getting together annually is to keep them in readiness for emergency services with the use of portable radio communications. These amateur radio operators absolutely love going up into the bush, camping and doing radio communications and they are already planning next year's trip to Timbarra.

The next event for the EGRG is the International Light House Weekend at Point Hicks on 19-20 August, 2011. The EGRG would like to thank the Department of Sustainability & Environment and the people responsible for providing the accommodation at Moscow Villa.

New High Power Amplifier

Modules for 1.3 GHz!

The brand new power amplifiers MKU PA 131000 CU and MKU PA 13250 CU provide excellent efficiency together with brilliant linearity and are ideally suited for huge EME- and contest-operations. The used LDMOS technology represents the current state of the art and allows the development of compact amplifier modules with high output power.

Applications
- Analog and digital operation modes e. g. SSB, CW, WSJT, (D)ATV
- High-Power EME-operations

Features
- High linearity
- High efficiency (up to 50 %)
- 50 V LDMOS technology
- Built-in sequence controller and overheat protection (only MKU PA 131000 CU)
- Milled copper case for optimum heat transfer

Type	MKU PA 13250 CU	MKU PA 131000 CU
Frequency range	1270 ... 1300 MHz	1280 ... 1300 MHz
Input power	4 ... 6 W	20 W ... 30 W
Output power	250 W	1000 W
Efficiency	typ. 50 %	typ. 50 %
Supply voltage	+ 50 V	+ 50 V
Current consumption	max. 12 A	max. 40 A
Input connector / impedance	SMA-female, 50 ohms	SMA-female, 50 ohms
Output connector / impedance	N-female, 50 ohms	7/16-female, 50 ohms
Case	milled copper, silver-plated	milled copper, silver-/nickel-plated

KUHNE electronic
MICROWAVE COMPONENTS

For further information please visit our website www.db6nt.com

Kuhne electronic GmbH | Scheibenacker 3 | D-95180 Berg | Germany | Tel. +49 (0) 92 93-800 939 | info@kuhne-electronic.de

The Simple SDR: a basic software defined radio anyone can build – Part One

Peter Parker VK3YE

Photo 1: A simple SDR in use (dual band tunable version pictured).

Introduction

Have you wanted to build a software defined radio but do not know where to start? Or hoped to make a simple receiver but found it difficult to get the parts? If so, this three transistor project could be for you.

About $25 worth of available components and a few hours construction will get a receiver covering the busiest part of 80 metres, with an option of 40 metres as well. Unlike other simple sets this one includes easy tuning, variable selectivity, a spectrum display and more.

These features are possible because the radio is software defined for use with a soundcard-equipped home or laptop computer. Most signal selection, amplification and detection is done by the computer driven by freeware software. The unit described here merely converts incoming RF signals to a low frequency (under 50 kHz) and the computer does the rest.

There is only one major catch with this arrangement. Because the receiver is so simple it receives all signals on two spots of the 'dial' and may pick up more interference. More advanced SDRs (including virtually all commercial and kit models) overcome this but need a soundcard with stereo input.

The cheap netbook used for this project has a mono audio input only so a 'proper' SDR would be of little benefit. Instead a 'bare bones' SDR was developed and the lack of image rejection tolerated. A simple workaround for this is possible and will be described in Part Two.

SDRs: how they work and what they can do

If you understand how a direct conversion receiver operates, you will know how this set works. Incoming RF signals are mixed with a locally generated RF signal to produce a difference frequency in the audio range which is amplified and fed to a speaker.

This receiver is similar except that the difference frequency is over a wider range, including frequencies above human hearing. This is fed to a sound card, which amplifies and processes the signal to audio like a conventional receiver but using software and computing power. A mouse is used to tune the receiver over a section of the band limited by the soundcard's bandwidth.

As the name suggests, software defined radios have features and flexibility not found on the cheaper conventional hardware-based receivers. Examples include variable bandwidth, allowing selectivity to be optimised for different modes. SDR users can 'see' band activity with a spectrum display. Digital noise reduction, used to dull interference, is also available. Increased computing power and software are likely to lead to more features in the future.

For the homebrewer software defined radios reduce the need for expensive mechanical tuning mechanisms, dials or frequency displays. Frequency stability is also improved, especially if they can be used to cover a band segment with a simple crystal oscillator or synthesiser.

As mentioned before, 'proper' SDRs require a stereo sound card for full performance. This is because, unlike this design, they offer single signal reception by presenting two signals slightly different from one another to the sound card.

While the analogy is not perfect, using this receiver is like having one ear. You will still hear signals, but there is not the extra discrimination or selectivity available with two ears. The workaround, to be described next month, will be like moving your head around and in most cases will reduce interference but not band noise.

Software

SDR software can be quite demanding and some programs may not run on slower machines. This was found true with the author's machine, which is a limited power Asus N10E netbook.

Several programs were tried. 'SDRadio' v0.99 by Alberto I2PHD was the most satisfactory and easiest to use. This can be downloaded from Reference One.

Before building the receiver it is worth trying various SDR programs to get a feel for how they work. This can be done by feeding audio from an SSB transceiver into the sound card to use the SDR as an audio filter with variable bandwidth. Only a small amount of audio will be required, so turn the volume way down, build

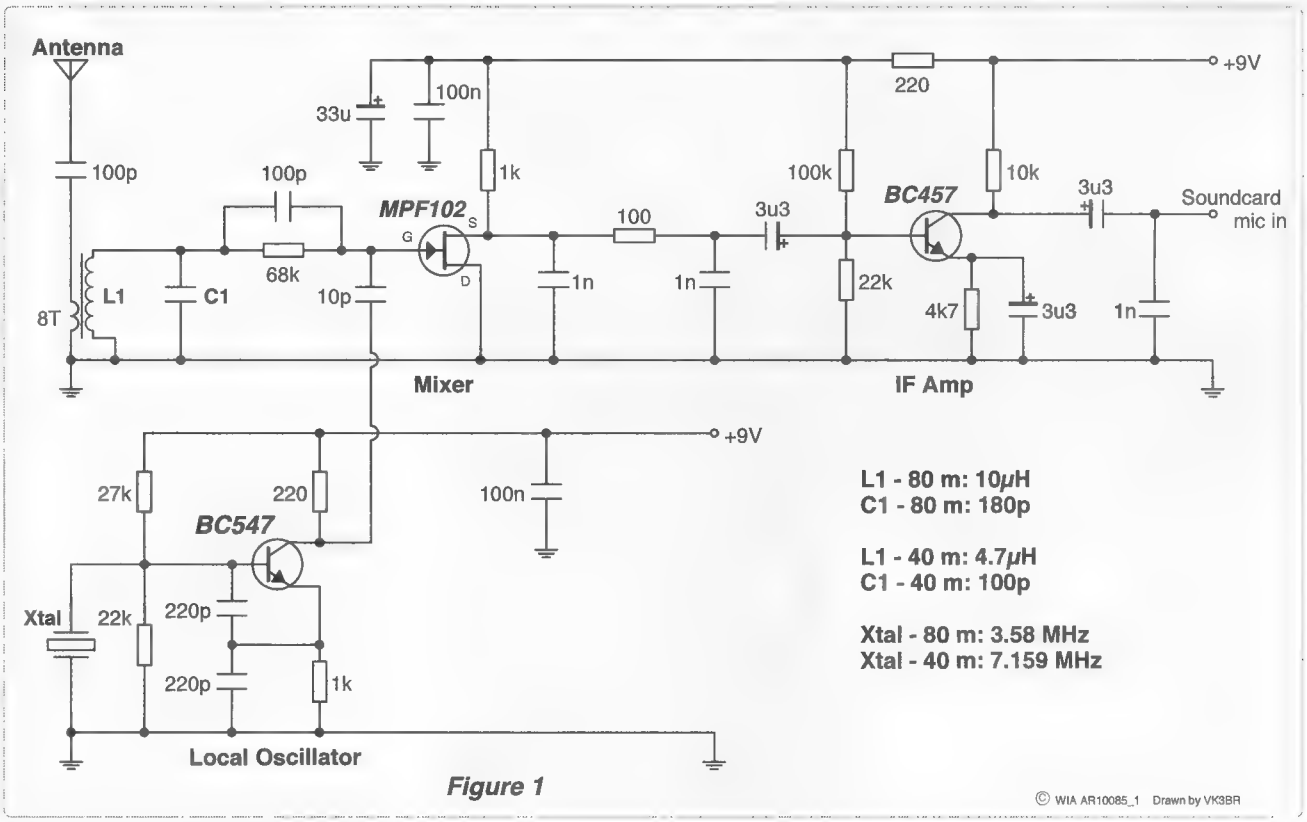

Figure 1: Simple SDR circuit diagram.

an audio attenuator and/or use an interface unit similar to that used for slow scan TV or digital modes such as PSK31.

Circuit description

The receiver presented here is the simplest possible that provides adequate performance. Every attempt was made to design for available parts and simple construction. Variations with greater frequency agility, dual band operation and USB port power will be described in Part Two.

Incoming signals on 3.5 or 7 MHz go via a simple bandpass filter. A commercially-available RF choke and fixed value capacitor avoids the need for critical coil winding or alignment.

Signals pass to a MPF102 FET mixer (Reference Two) which mixes them with a locally-generated signal from a crystal oscillator centred on the band segment you wish to receive.

The mixer's output contains two bands of frequencies; a high frequency sum and a low frequency difference. The former is not required so is suppressed after the mixer.

The low frequency difference signals (which are in the audio range to just above) are boosted by the intermediate frequency amplifier (Reference Three) before being presented to the computer's sound card via the microphone input (which provides additional amplification).

Signals from the sound card are displayed as a spectrum display centred on the crystal oscillator's frequency. For example if the receiver has a 3580 kHz crystal an incoming signal on 3600 kHz will produce spikes at 20 kHz above and below the centre frequency. Similarly a 3590 kHz signal will produce spikes 10 kHz above and below.

Tuning uses the mouse to pick off the desired signal from the several that may be displayed. Bandwidth and noise reduction are then varied to taste.

The available tuning range from a single crystal is determined by the sound card. A basic sound card with 48 kHz sampling allows coverage 24 kHz above and below the centre frequency. In other words the 80 metre version of this receiver will tune about 3556 to 3604 kHz and the 40 metre version will cover 7135 to 7183 kHz. More advanced sound cards have 96 kHz sampling, which should double the range tunable. Wider excursions require a variable local oscillator, to be covered in Part Two.

A nine volt battery powers the unit. These are not cheap but are fine for casual use. Not using the USB port lessens the chance of interference from the computer or even damaging it if you get a connection wrong.

Obtaining parts

All parts, including the 3.58 MHz crystal can be obtained from suppliers such as Jaycar and Altronics. 7.159 MHz crystals for the 40 metre version are much less available but may still be obtainable from specialist suppliers or old electronic equipment.

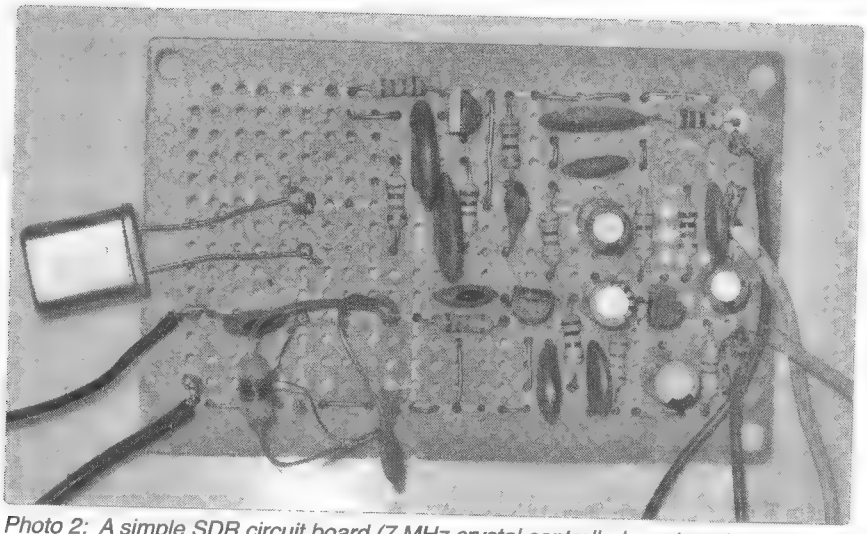

Photo 2: A simple SDR circuit board (7 MHz crystal controlled version pictured).

Construction

The first decision is to choose a band – 80 or 40 metres. For the beginner 80 metres is recommended as 3.58 MHz crystals are readily available and the tuning range includes an active part of the band.

7.159 MHz is another mass-produced (but less common) crystal frequency so a 40 metre version is also possible. This is above the busiest part of 40 metres, but some stations will still be heard, notably the VK2WI Sunday broadcast on 7.146 MHz and North American DX activity around 7.160 MHz in the early evening.

Apart from the crystal the only other difference between the 80 and 40 metre versions is the value of the RF choke (10 or 4.7 uH) and companion capacitor (180 or 100 pF). Unlike other parts of the circuit, these values are critical as substitutes will harm sensitivity.

Provided component leads are kept short, a wide variety of construction styles can be used. The first version of this receiver had the parts simply soldered together with no circuit board. 'Dead-bug' style on a piece of circuit board material worked for another. Matrix board was used for the model presented here, with the component leads soldered underneath.

The most fiddly part of construction is probably winding the antenna coil around the body of the front end RF choke. This requires a few centimetres of fine enamelled copper wire (say 0.2 mm). This is available new or salvaged from old transformers or toroids in power supplies, etc. The number of turns is not critical, but too few will lessen sensitivity.

Initially no case was used, but the receiver was eventually put into a plastic box. However if radiated interference from the computer or monitor is a problem a metal box would be worth trying.

Finally you will also need a lead for the soundcard input. This can be made from a 3.5 mm stereo plug (connect tip and earth) and some shielded audio cable. Alternatively you may have some faulty headphones whose lead can be salvaged.

The computer's internal speaker can be used but either headphones or an external speaker provide increased volume and clarity.

Testing and use

The local oscillator can be tested by checking its output on a nearby HF receiver (even if it is only a broadcast set with a shortwave band). Alternatively an RF probe or field strength meter will produce an indication if touched on the collector of the oscillator transistor.

With the software loaded, plug the receiver into the sound card's microphone input and monitor the display. Connect an antenna (20 metres of wire outdoors should be sufficient). Assuming a noisy suburban location the 'grass' display should rise to indicate that ambient noise is being picked up. Enter the centre frequency (either 3579 or 7159 kHz) to make the frequency display accurate.

From the menu set the sampling to 48 kHz (96 kHz can be tried later). Select 'LSB' and click the mouse on any spikes on the display. A thin spike is a carrier signal while a varying cluster of nearby spikes is likely to be an SSB signal. The receiver's gain (labelled 'AGC Gain' on *SDRadio*) should be set to maximum.

Try to tune in the signal. If you hear what is obviously speech but cannot resolve it, notice that there will be a 'mirror' spike a similar distance from the centre of the display. Click on that and tune this one in instead.

If you cannot hear anything it could mean there is no activity (very likely during the day on 80 metres), the connections or soundcard input volume settings are incorrect (should be maximum), or noise generated by the computer swamps incoming signals.

I have found that laptops can be quieter than home computers, but if noise is still a problem experimentation with shielding the receiver may help. An RF signal generator, dip oscillator or HF transceiver is useful to provide a test signal to troubleshoot if required.

Conclusion

Described here is about the simplest possible software defined radio for worthwhile amateur reception. Designed to be reproducible with available components it should make a fine beginner or club project. Its main limitations are a limited frequency coverage and interference from image signals. Part Two next month will present some improved designs that overcome these problems.

References

1. I2PHD's website www.sdradio.eu
2. CF Rockey, W9SCH *Rock's Fishing Box,* Low Power Scrapbook, RSGB, 2001, page 72.
3. J Young, BRS3339 *A simple 29 MHz direct conversion receiver,* Low Power Scrapbook, RSGB, 2001, page 102.

A simple and reliable tuning indicator for a 100 watt HF transmitter

Warren Stirling VK3XSW

This tuning indicator is a by-product from my rebuilding an old military antenna coupler which was designed to match short vertical or short wire antennae at HF. Unfortunately for me, the antenna coupler had been modified somewhere in its history; the original tuning indicator and its associated components had been removed. So I needed a replacement.

Requirements

The requirements were:

- to allow the controls of the antenna coupler to be adjusted to present the best match possible to a 100 W class HF transceiver with a minimal level of RF applied, probably starting from a *really* bad mismatch, say 20:1 SWR.
- to work *without user intervention* on 3.5 MHz, 7 MHz, 10 MHz and 14 MHz at RF levels from five watts or so being required to adjust the antenna coupler, to the 100 watts or so of RF from the HF rig, with the carrier level control wound flat out, that is, no range switch or 'calibration' control, it just works from five watts to 100 watts, 3.5 MHz to 14 MHz, all on the same meter scale.
- to be as simple and as reliable as possible.

The indicator I finished with needs around five watts of RF for a reliable indication, at that level a 20:1 SWR is not going to bother a 100 watt HF PA for the few minutes I would need to adjust the antenna coupler for best match. It is basically an RF ammeter, but modified to suit the listed requirements.

The current transformer and meter circuitry are copied from an RF ammeter described by Drew Diamond in one of his books, *Radio Projects for the Amateur - Volume 3*, page 113, *RF ammeters for high frequency measurements*, while the concept of compressing the meter scale came from reverse engineering the circuit of the tuning indicator used in the PCM Electronics MTU100 antenna tuner, as suggested in various discussions on the VK3RMU repeater drive-time net.

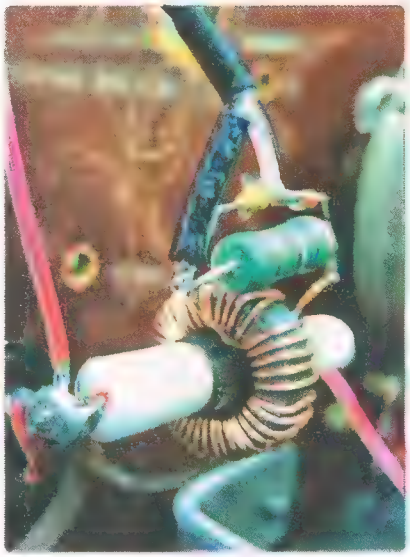

Photo 1: The tuning indicator current transformer close up.

My only originality in implementing this tuning indicator was to combine the separate circuits and experiment with the component values for the meter compression circuit until I had a tuning indicator that worked the way I wanted. The circuit that resulted indicates current flow into the attached antenna and as scale compression is employed in the meter circuit a 'tune for peak' method of adjusting the antenna coupler is employed. As such, the meter scale is NOT calibrated, nor does it need to be.

Arriving at the final circuit

The current transformer for the meter circuit was constructed in similar fashion to the Drew Diamond article, with the load resistor, rectifier diode and filter capacitor mounted directly to the ends of the secondary winding. The primary in my case was a piece of one millimetre diameter, approximately, enamelled copper wire threaded through a piece of the inner insulation taken from a short piece of RG213 from which the core, braid and outer insulation had been removed. The inner was then wrapped in electrical tape to pack it out to the point where the toroid was a neat fit.

The current transformer was then wired into the output circuit of the antenna coupler. A thin coaxial cable wired to the current transformer was then led out through the casing of the antenna coupler and connected to a digital voltmeter. The coupler was connected to a short vertical antenna and ground stake together with a HF transceiver set for CW. Several readings were taken, with the antenna coupler adjusted for best match, as indicated by a maximum voltage reading on the digital voltmeter and verified with an inline SWR bridge connected between the HF radio and the antenna coupler.

The results are tabulated below:

	Carrier level	
Frequency	**5 watts**	**80 watts**
3.650 MHz	3.16 V	13.8 V
7.095 MHz	4.34 V	18.2 V
10.140 MHz	6.20 V	18.0 V
14.125 MHz	6.20 V	24.0 V

Only four spot frequencies were chosen, one per band, as I only wanted to know roughly what voltages I could expect the current transformer to produce; that way I could test the meter and scale compression circuit using a variable voltage DC supply instead of using the 100 watt HF rig and the antenna coupler. So, in knowing what sort of voltage I'd have to allow for, the movement of the meter I had to hand was confirmed as a 50 mA

movement with full scale deflection measured at 203 mV.

Using ohms law to calculate the series resistor required for full scale deflection at the minimum voltage produced by the current transformer with *no* scale compression circuit present, that is, 3.16 V gave me an answer of 45.9 kΩ. I picked 47 kΩ as the nearest higher equivalent resistance value as a higher value resistance meant that the meter needle stayed on the scale, which makes it easier to read.

The scale compression circuit is formed by adding extra resistors and a silicon diode between the current transformer and the meter circuit in such a way that as the voltage from the current transformer increases the meter circuit is presented with a proportionally smaller increase.

The circuit

The current transformer has a fully floating secondary winding formed by 42 turns of 0.42 mm diameter enamelled copper wire wound on a Jaycar LO-1230 toroid. The primary of the transformer is assembled as previously described. There is no shield, electrostatic or otherwise, between the primary and secondary windings.

A 470 Ω 3 W metal film resistor paralleled with a 1N4148 diode in series with a 10 nF monolithic capacitor are wired across the secondary of the current transformer such that the end of the winding connected to the diode is 'closer' to the antenna coupler; these three components, with minimal lead length, are supported by the ends of the 42 turn secondary winding. A length of RG174 coax feeds the voltage from the 10 nF capacitor, coax centre to the diode/capacitor junction and coax shield to the other side of the capacitor, to the meter circuit.

I installed the current transformer to detect current flow into the antenna, that is, the primary winding is connected between the antenna terminal and the output of the antenna coupler, as measuring current flow into an antenna is, I feel, the single easiest way to adjust an antenna coupler.

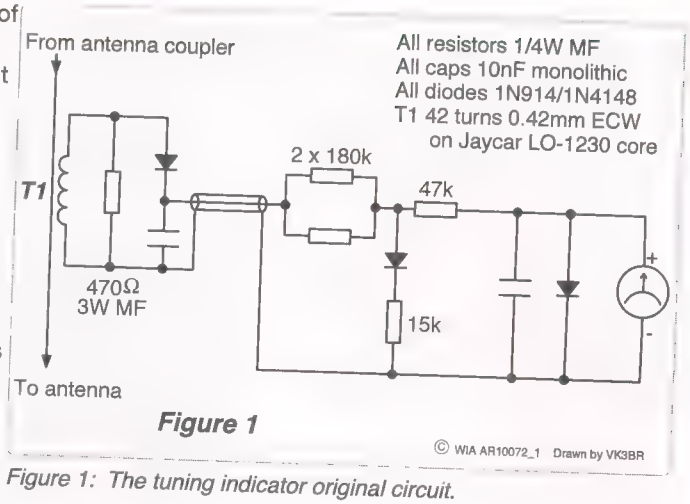

Figure 1: The tuning indicator original circuit.

The centre of the coax cable from the current transformer connects to one end of two paralleled 180 kW 0.25 W metal film resistors. The other end of the parallel resistors is connected in series with a 47 kW 0.25 W metal film resistor to the positive side of the meter. The meter negative is connected to the shield of the coax. A 1N4148 diode is connected across the meter coil as overload protection, such that the diode is forward biased if the voltage applied to the meter coil exceeds 600 mV; the meter FSD is 203 mV. A 10 nF monolithic capacitor is connected across the protection diode and the meter to prevent secondary RF rectification which would cause errors in the meter reading.

Scale compression is achieved by wiring yet another 1N4148 diode, in series with a paralleled 15 kΩ 0.25 W metal film resistor, from the junction of the 180 kΩ resistors and the 47 kΩ resistor, to meter negative; so that as the voltage from the current transformer increases this diode starts to conduct, increasing the voltage drop across the paralleled 180 kΩ resistors and thereby reducing the voltage applied to the meter circuit.

All of these components are mounted 'dead-bug' style on a homebrew circuit board which mounts on the back of the meter. Instead of etching the board I drew the connection points onto the copper with a pencil and then used a metal rule and scriber to cut through the copper to the laminate underneath. The narrow slots made by the scriber were then widened with a needle file of square cross section. It's a rough and ready approach to making simple one off boards, but it works!

Photo 2: The tuning indicator original meter board close up.

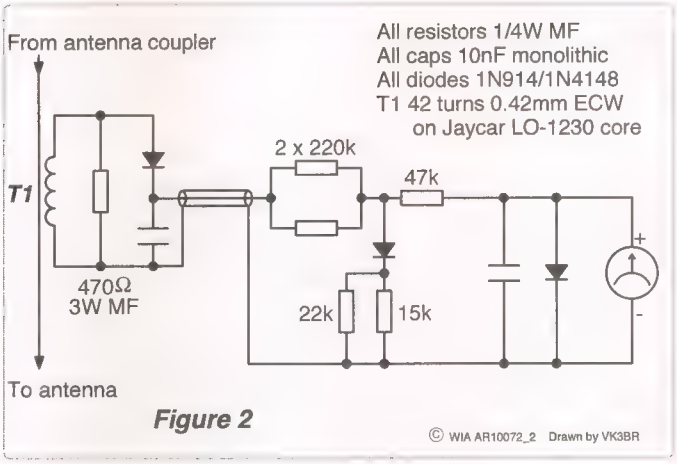

Figure 2: The tuning indicator final circuit.

Choosing the scale compression resistors

The values of the meter scale compression resistors, the 90 kΩ in series, that is, the two paralleled 180 kΩ resistors, and the 15 kΩ in parallel, were found by trial and error using two resistor wheels and a variable voltage DC supply to arrive at the meter response I wanted, given the voltages produced by the current transformer.

The scale of the meter I had to hand has five primary divisions, numbered one to five with four un-numbered secondary divisions between each primary division. Initially the shunt resistor and diode are left unconnected and an initial value is chosen for the series resistor so that with the minimum voltage from the current transformer applied, 3.16 V, the meter needle deflects to somewhere between the first and second primary scale divisions; when the shunt resistor and diode are connected this deflection will drop to somewhere closer to the first primary scale division.

Once an initial value for the series resistor is found the shunt resistor, with an initial resistance approximately one sixth that of the series resistor, is connected and the maximum voltage from the current transformer, 24 V, is applied. The meter needle should deflect to somewhere between the fourth and the fifth primary scale divisions. If the meter deflection is, say, half a primary scale division less than this increase the value of the shunt resistor, if the meter deflection is, say, half a primary scale division more than this decrease the value of the shunt resistor. If the meter needle is off the scale increase the value of the series resistor.

The values of the shunt and series resistors are adjusted so that when the minimum voltage from the current transformer (3.16 V) is applied, the meter needle deflection is close to the first primary scale division and when the maximum voltage from the current transformer (24 V) is applied the meter needle deflection is close to, but does not reach, the fifth primary scale division.

In the case of the military antenna coupler its 'tune' and 'match' controls can be adjusted with only five watts of carrier applied and then fine tuned with a higher carrier level. At 80 watts carrier the meter is only approximately 80% full scale.

Field testing

With the meter circuit assembled and bench tested it was fitted to the antenna coupler. The coupler was tested with two antennae; a 3.6 metre (12 ft) three section ex-military whip and a nine metre (30 ft) end fed wire. In both cases four 4.9 metre (16 ft) ground radials, spaced 90 degrees apart and an earth stake were employed as an RF earth.

To my surprise and interest, the meter needle went off the scale during testing. After reviewing my notes on the initial testing of the current transformer I found the cause; the initial testing set up did *not* include ground radials, only an earth stake. Proof positive that ground radials are worth the effort, especially with short verticals!

After more testing the resistors in the scale compression circuit were changed, the two paralleled 180 kΩ 0.25 W metal film resistors were replaced with two paralleled 220 kΩ 0.25W metal film resistors and a 22 kΩ 0.25 W metal film resistor was added in parallel to the existing 15 kΩ 0.25 W metal film resistor.

Note

The meter scale for this tuning indicator was not intended to be calibrated as scale compression is employed. Instead, the 'tune' and 'match' controls of the antenna coupler are adjusted for maximum meter deflection, tune for peak, which equates to maximum current flow into the antenna.

Photo 3: The tuning indicator meter itself.

Plan NOW for JOTA/JOTI 2011!
Contact your local **Scout** or **Guide** group.

VK5news Adelaide Hills Amateur Radio Society

David Clegg VK5KC, AHARS President

Much is happening at the club.

The July meeting was a talk by Andrew Russell VK5CV. Andrew works as a cardiologist and spoke of the similarities between the human cardiovascular system and radio transmission. It is amazing to see how the heart and vascular system looks like a radio transmitter and feedlines even down to blood pressure which can be likened to VSWR.

It has become a regular activity at our meetings to invite a member to talk on their life in amateur radio. July's presenter was Wally, VK5TW. Wally has been on the air since the 1960s and had a great story to tell.

Several of our members were successful at recent licence upgrades. Paul VK5PH conducted a course over several weeks and all candidates were successful in moving to Standard or Advanced. We also have one new F call awaiting his licence. Congratulations all. Club membership now stands at 140, which is about average for this time of year.

Photo 1: Andrew VK5CV.

Back in January the Club started negotiations with the Blackwood Guides to have use of a vacant shed on their property. The lease was signed in early May and renovations commenced then. The place was rewired, insulated, walls and ceiling Gyprocked, and an airconditioner installed. Not forgetting two 75 mm pipes in the ceiling for coax feeds or, as some suggested, 'exhaust outlets for the V8 generator'. Recently carpet tiles were laid and paving completed outside under the verandah. Many hours of volunteer labour has gone in to the renovations. We have received several cash donations along with donations of such things as lights, first aid kit and a refrigerator.

We want to use the Shack for training, committee meetings, club projects and activities. The adjacent Guide Hall is unfortunately not large enough for our regular meetings which will continue to be held at the Belair Community Centre. The official opening will be on Saturday, 3 September. This will be carried out by a local club identity. All amateurs, spouses, friends and relatives are invited to be present at 2 pm, at Hannaford Road, Blackwood. Parking is a little tight, so we suggest that visitors park on Main Road and walk the short distance to the hall. The official name is 'The Shack'. The original Blackwood Radio Club, which operated in the 1920s and 1930s had a club station by the same name, so we thought it right to carry this on. The site of the old Blackwood Radio Club 'Shack' was only about 500 metres from where we are now. They sometimes had a Saturday night dance, but I do not think we will follow this tradition.

The club August meeting will be a show and tell night.

Photo 2: Barry VK5TW tiling at the 'Shack'.

Members can bring along their favourite project and be prepared talk about it. September will be a talk on vector analysis by Graham Dicker, and October will be our construction night.

A reminder that Sunday, 20 November will be the club Hamfest, held at the Goodwood Community Centre, Rosa Street, Goodwood. All the usual commercial vendors will be in attendance along with much pre loved equipment. NERC will provide their usual BBQ and ALARA will feed the hungry hordes as well.

The Club holds an extensive library of DVDs recorded at meetings. These are presently being re catalogued, please check the website www.ahars.com.au for details. DVDs can be purchased for $10 posted in VK.

AHARS has undertaken a sister club relationship with the Darwin Amateur Radio Club. The idea is to foster closer ties, as VK5 and VK8 were once part of the same division of the WIA. AHARS members are asked to listen out for DARC operators and have a contact and vice versa; perhaps improve your station so you can make it on to the DARC callback after the Sunday broadcast. We will be providing some DVDs of our lectures to the Darwin group to supplement their meetings.

AMSAT

David Giles VK5DG
vk5dg@amsat.org

Space shuttle satellites

At 0157 UTC on 20 July, the space shuttle Atlantis landed at Kennedy Space Centre. It was the end of a 30 year era of space travel of triumph and tragedy. Seeing as this is the AMSAT column, we will be looking at some of the shuttle's satellite missions.

I will leave it to others to chronicle the 37 missions to build the International Space Station, the tragedies of Challenger and Columbia, and ignore the secret missions for the Department Of Defence. Most of the early shuttle mission's main goals were to launch commercial and government satellites. After the Challenger explosion in 1986 the commercial market went elsewhere and the shuttle was used for scientific missions. Of these, the Hubble space telescope took up six missions with the initial launch and five grease and oil changes [1].

Versatility

The space shuttle or, more properly, the 'Space Transport System', was in many ways a utility vehicle - it transported stuff to space. It also retrieved stuff from space. It was used to work on stuff in space as well. With the big cargo hold it was more like a ute or delivery van than a sports car or people mover. The space shuttle carried many commercial, government and military satellites into orbit. Since the shuttle could only go to relatively low altitudes, most of these satellites needed a booster rocket to get them to geostationary orbit.

During the science phase, roughly between Challenger and building the ISS, many experiments were carried in the cargo hold. But some were made satellites in their own right. SPARTAN was a 1.5 m cube used for solar observations that lifted out of the cargo bay by the remote arm and set free. After being a satellite for a few days it was retrieved and stowed back in the cargo bay. Another was the LDEF (Long Duration Exposure Facility) [2]. This bus sized craft contained 57 experiments and had to be repaired in space before leaving Challenger in 1984 (STS-41C). In 1990, with only one month left before re-entry, the LDEF was retrieved by Columbia (STS-32). In 1995 Japan launched their SFU (Space Flyer Unit) using an H-2 rocket from Tanegashima.

AMSAT-VK

AMSAT Co-ordinator
Paul Paradigm VK2TXT
email coordinator@amsat-vk.org

Group Moderator
Judy Williams VK2TJU
email secretary@amsat-vk.org

Website
www.amsat-vk.org

Group site:
group.amsat-vk.org

About AMSAT-VK

AMSAT-VK is a group of Australian amateur radio operators who share a common interest in building, launching and communicating with each other through non-commercial Amateur Radio satellites. Many of our members also have an interest in other space based communications, including listening to and communicating with the International Space Station, Earth-Moon-Earth (EME), monitoring weather (WX) satellites and other spacecraft.

AMSAT-VK is the primary point of contact for those interested in becoming involved in amateur radio satellite operations. If you are interested in learning more about satellite operations or just wish to become a member of AMSAT-Australia, please see our website.

AMSAT-VK monthly net Australian National Satellite net

The net takes place on the second Tuesday of each month at 8.30 pm eastern time, that is 0930 Z or 1030 Z depending on daylight saving. The AMSAT-VK net has been running for many years with the aim of allowing amateur radio operators who are operating or have an interest in working in the satellite mode, to make contact with others in order to share their experiences and to catch up on pertinent news. The format also facilitates other aspects like making 'skeds' and for a general 'off-bird' chat. In addition to the EchoLink conference, the net will also be available via RF on the following repeaters and links.

In New South Wales

VK2RMP Maddens Plains repeater:146.850 MHz
VK2RIS Saddleback repeater: 146.975 MHz
VK2RBT Mt Boyne Repeater on 146.675 MHz

In Queensland

VK4RIL Laidley repeater on 147.700 MHz
VK4RRC Redcliffe 146.925 MHz IRLP node 6404, EchoLink node 44666

In South Australia

VK5TRM, Loxton on 147.125 MHz
VK5RSC, Mt Terrible on 439.825 MHz IRLP node 6278, Echolink node 399996

In Tasmania

VK7RTV Gawler 6 m. Repeater 53.775 MHz IRLP node 6124
VK7RTV Gawler 2 m. Repeater 146.775 MHz. IRLP node 6616

In the Northern Territory

VK8MA Katherine 146.700 MHz FM

Operators may join the net via the above repeaters or by connecting to EchoLink on either the AMSAT-NA or VK3JED conferences. The net is also available via IRLP reflector number 9558. We are keen to have the net carried by other EchoLink or IRLP enabled repeaters and links in order to improve coverage. If you are interested in carrying our net on your system, please contact Paul via email. Frequencies and nodes can change without much notice. Details are put on the AMSAT-VK group site.

Become involved

Amateur satellite operating is one of the most interesting and rewarding modes in our hobby. The birds are relatively easy to access and require very little hardware investment to get started. You can gain access to the FM 'repeaters in the sky' with just a dual band handheld operating on 2 m and 70 cm. These easy-to-use and popular FM satellites will give hams national communications and handheld access into New Zealand at various times through the day and night.

Should you wish to join AMSAT-VK, details are available on the web site or sign-up at our group site as above. Membership is free and you will be made very welcome.

It had an infra-red telescope as well as other experiments. After 10 months in space it was retrieved by Endeavour (STS-72).

In 1984 Challenger (STS-41B) had the first untethered space-walks where Bruce McCandless and Robert Stewart became the first men to become satellites.

The last big satellite carried by a shuttle was the Chandra X-ray telescope by Columbia in 1999 (STS-93) [3]. Chandra is still in use and has an elliptical orbit that takes it 133,000 km away. Apart from the Hubble Space Telescope and Chandra, the Compton Gamma Ray Observatory was launched in 1991 by Atlantis (STS-37). At a mass of 17,000 kg, it was the heaviest payload flown at the time. It also has the reputation as the NASA's first intentionally controlled de-orbit.

Interplanetary Satellites

NASA launched three interplanetary probes from the shuttle. In 1989 Atlantis (STS-30) launched the Magellan probe to Venus. Magellan had only one instrument – a synthetic aperture radar that was used to create a three dimensional map of Venus' surface [4]. Also in 1989 Atlantis (STS-34) launched Galileo to explore Jupiter [5]. The story of Galileo could fill a book with its trials of getting a launch and antenna problems and eventual success. It was originally scheduled to be launched in 1982 and again in 1986 but the Challenger incident stopped that. In 1989 it was launched, but by using a smaller boost rocket it had to make a fly-by past Venus. This brought Galileo closer to the Sun than designed. Also the main antenna did not unfurl properly for reasons that will never be known. Despite being crippled Galileo achieved most of its goals and spent eight years around Jupiter and its moons. In 1990 Discovery (STS-41) launched the Ulysses probe to go around the Sun's polar regions [6]. The Ulysses mission was different in many ways. First Ulysses was sent to Jupiter to use Jupiter's enormous gravity to flip it from orbiting around the Sun's equator (like the planets do) to the Sun's south pole. Then it would orbit over the north pole then back out to Jupiter's orbit. Ulysses did this three times so was able to measure the sun during solar maxima and minima. But Ulysses didn't have any cameras. It also didn't have any solar panels. Since both Galileo and Ulysses went out as far as Jupiter where the Sun's intensity is 1/25th of that we get on Earth, solar panels would be impractical. Like the Pioneer and Voyager spacecraft before, Galileo and Ulysses were powered by radioactive thermal generators, using decaying plutonium to provide heat and electricity. After 19 years of operation the generator output was too low to keep Ulysses warm so its mission ended. Imagine putting a machine with 8 kg of Plutonium in a space shuttle today.

Amateur Satellites

Now, moving onto all the amateur related satellites launched. The first was the Petite Amateur Naval SATellite PANSAT (PO-34) [7]. Launched from Discovery in 1998 (mission STS-95) PANSAT was a digital microsat that used spread spectrum techniques. Unfortunately the details of the special modem to use the satellite were not widely published and so very few would have been able to use it. In 2005 Discovery took to the ISS a suitcase shaped object called the MISSE (Materials International Space Station Experiment). The MISSE was attached to the outside of the ISS to expose various materials to the harsh space environment. Part of this suitcase was an amateur radio communications package called PCSat2 [8]. Like PCsat (NO-44) PCSAT2 was a digital APRS transponder with uplinks on 10 m and 2 m and a downlink on 70 cm. The whole MISSE experiment was autonomous with PCSAT2 providing telemetry. After about a year in space the package was retrieved and brought back to Earth on the shuttle Atlantis (STS-115). While not a separate satellite as such, PCSAT2 was used by many amateurs worldwide.

The same people that created PCsat and PCSAT2 also were involved with the next amateur satellites from the shuttle. In 2006 Discovery (mission STS-116) launched RAFT (NO-60), ANDE (NO-61) and FCal (NO-62) after visiting the ISS [9, 10, 11]. RAFT was a cubesat with an APRS transponder on 10 m and 2 m. Its main mission was to receive radar pulses on 217 MHz to aid in its tracking. RAFT lasted about five months before re-entry. ANDE (Atmospheric Neutral Drag Experiment) was a 48 cm diameter aluminium sphere with no solar panels or antennas. It was designed to be tracked using lasers and telescopes to determine the atmospheric density as it de-orbited. It had reflectors and six on-board lasers. They managed to wrap a slot antenna around the circumference and fit it with a TNC similar to PCSAT. FCal was also a spherical satellite similar to ANDE but had a cubesat inside it. After a quick look through my log book notes, I heard RAFT and ANDE but not FCal.

In 2009 Endeavour (STS-127) launched a cluster of satellites using amateur frequencies [11]. Castor and Pollux were similar to ANDE in that they were spherical satellites used to measure Earth's upper atmosphere. They were the same size as ANDE but Castor had a mass of 50 kg and Pollux only 25 kg. The different masses gave different orbit characteristics. Both sent telemetry using 2 m packet. DRAGONsat consisted of two satellites, AggieSat2 and BEVO-1. The mission was to have these separate and then rendezvous using GPS for navigation. The mission was only partially successful.

Last Journeys

So where will they rest? Discovery will go to the Smithsonian's National Air and Space Museum at Dulles International Airport, Washington DC. It will replace the space shuttle Enterprise which will move to the Intrepid Sea-Air-Space museum in New York City. The Enterprise was the test shuttle that was used for atmospheric test flights and was

never flown in space. Atlantis will remain at the Kennedy Space Centre in Florida and Endeavour will go to the California Science Centre in Los Angeles.

Final Pass

I have no doubt that some of you reading this may have been to the USA and seen shuttle memorabilia or even witnessed a shuttle launch. Also you may have been saddened by the end of the shuttle era. The only object that I have seen up close from the above column is the Japanese SFU. It now resides in the National Museum of Nature and Science in Tokyo.

References

[1] http://www.nasa.gov/mission_pages/shuttle/shuttlemissions/index.html
[2] http://setas-www.larc.nasa.gov/LDEF/index.html
[3] http://chandra.si.edu/
[4] http://www2.jpl.nasa.gov/magellan/
[5] http://solarsystem.nasa.gov/galileo/
[6] http://ulysses.jpl.nasa.gov/
[7] http://sp.nps.edu/pansat/
[8] http://www.usna.edu/Users/aero/bruninga/pcsat2.html
[9] http://www.usna.edu/Users/aero/bruninga/raft.html
[10] http://www.usna.edu/Users/aero/bruninga/ande.html
[11] http://www.usna.edu/Users/aero/bruninga/fcal.html
[12] http://aggiesatweb.tamu.edu/index.php/projects/lab_projects/aggisat_2

VHF/UHF - An Expanding World

David Smith VK3HZ
vk3hz@wia.org.au

Weak Signal

Aircraft enhancement

Even though the band conditions are fairly quiet, aircraft enhancement will always be a possibility for long distance contacts. Barry VK3BJM writes of his recent experiences:

I wanted to let you know about the experiment Colin VK2BCC, Arie VK3AMZ and I have been conducting over the last month. Working into the Blue Mountains area, using the Melbourne > Sydney aircraft track, has been almost impossible from here in Kyneton - the track is too far to the east of our signal path to support AE. Well, a combination of observations by Colin and myself has revealed the method.

Back on the morning of 9 June, towards the end of the morning AEP 'window', I noticed that an Airbus A330 (QFA575) flying from Sydney to Perth had tracked down the Sydney > Melbourne path to the ACT. It then changed course to 263 degrees. This takes it across just north of Holbrook, Yarrawonga, Echuca, exiting VK3 between Kaniva and Bordertown. The flights to Perth do this occasionally, not constantly. I had observed this path in use before, and made observations on the resultant enhancement window created for the Mildura and Adelaide two metre beacons - described in 'VHF/UHF An Expanding World' in November, 2008. The track also provided me with my first two metre contact with Peter VK5ZPG, documented in the Jan/Feb, 2009 edition of the column.

Figure 1: Aircraft enhancement paths.

The aircraft had only just changed course and looking at my ADS-B screen, I thought it would be worth trying to work Colin, who was logged into the VK Logger at the time. I sent him a few messages, but as luck would have it he was away from his computer and so we missed the opportunity. The aircraft did provide a 56 contact at 2347 UTC with Peter VK5PJ on 144.100, so it wasn't completely wasted.

There followed an email discussion between Colin, Arie VK3AMZ and I about trying this out with more intent. It was agreed that when an aircraft was seen on the path, Colin would run a CW keyer. The keyer would send a short burst of CW, then pause for Colin to listen for responses. Over the next couple of weeks though, the aircraft flew a number of paths to Perth - any path, it seemed, except the one we wanted. Mostly they tracked west out over Katoomba and West Wyalong; sometimes it was down the track to Melbourne, only changing course when they neared Mansfield, bringing them across a little to the south of my QTH.

Whilst we were being frustrated by this, Colin identified exactly how and why the route changes were taking place, and how we could be as informed as the pilots. I had

suspected that the decision was based on a meteorological factor, but Colin identified that it was the location of favourable (read fuel/dollar-saving) winds that was 'sealing the deal'. This BOM link gives us the map to monitor what is going on, and whether it is worthwhile getting up in the morning:

http://www.bom.gov.au/australia/charts/viewer/index.shtml?type=windbarb&level=200hPa&tz=AEDT&area=Au&model=A

1 July was our first chance with a favourable chart. Sure enough, VOZ553 and QFA575 took off from Sydney within 10-15 minutes of each other, and turned right at the ACT. Colin ran a keyer, which appeared out of the noise as the aircraft moved from 56 to 55 degrees from me. (The Logger has Colin at 54.9 degrees from me.) The enhancement lasts about a minute and a half - Colin's signal drops out when the aircraft is at about 53 degrees from me. (My ADS-B receiver will not resolve down to minutes and seconds, so I cannot be any more precise than that.) Both VOZ553 and QFA575 flights use A330, so they are a decent size - better than a B737, for sure. In fact, I think almost all the Sydney-Perth QANTAS and Virgin flights run A330s. QANTAS also runs a 747 on the route, once daily, which is even better for those who might be in the shack around midday. A Jetstar B737 that took the route only generated 41 signals, at the same height as the A330.

The two flights were at 40000', and most of the flights along the path are at that height. We have had one day where they flew at 32000', and it seems we do not have mutual visibility at that altitude. Our path is 666 km, if the calculator on the Logger is to be believed.

Colin runs 100 watts to a single 12-element Yagi (unsure of his feedline/loss), and appears as a reasonably consistent 51 signal. My signal appears mostly at the 52 mark.

We have now repeated this exercise a number of times, all with the same favourable result, except for the day when the A330 was tree-hopping at 32000'.

The enhancement also works for Arie VK3AMZ, who is a little bit south of Melton. Arie naturally sees Colin a few minutes before I do and, due to the path geometry, Arie's AE window to Colin is quite separate to mine. The 'hotspot' is around Cookardinia, just NNW of Holbrook.

Weather permitting, it would be well worth others to the west of Melbourne, Ballarat, Geelong and Bendigo, for instance, giving this a try out. I am interested in getting Ian VK3AXH to attempt it - Colin tells me Ian is on the same beam heading from Blackheath as myself. The big question is whether Ian is too far over the Great Divide to see the aircraft.

I would also like to see if the same aircraft would support AE into the area to the west of the Blue Mountains, to Orange, Bathurst, etc.

Aircraft enhancement paths

It is good to see Barry and company investigating the use of AE for paths where a contact would not otherwise be possible. Rex VK7MO is carrying out similar AE experiments looking at aircraft flying across the path between him and VK3. The only flight that is visible to both ends and flies across the path is an Air New Zealand flight that goes directly from Auckland to Perth once per day, but not every day. Unfortunately, the flight path of the aircraft varies significantly from day to day, one day flying as far north as Tullamarine Airport and another day sneaking through by flying almost directly over Rex's QTH in Hobart. In about two weeks of attempts, only once has the aircraft been a) flying; b) with ADS-B so we could 'see' it; and c) flying down the middle of Bass Strait. Much patience required!

GippsTech 2011

Another GippsTech has been held and, once again, it has shown itself to be one of the premier events for VHF/UHF/Microwave enthusiasts. Many excellent presentations were given ranging across the most diverse aspects of the hobby covering bands from six metres to 10 GHz and beyond. Thanks to those volunteers who gave their time to organise and run the event, and thanks to all the presenters who have provided much food for thought!

One aspect of GippsTech that I do enjoy is the chance to catch up face-to-face with like-minded people. The informal Friday night dinner, Saturday dinner and the breaks during the day provide a chance to exchange ideas and hear about people's projects. This year, it seems that many people are working on microwave transverters, many based on the no-tune kits from Graham VK3XDK. Many are also talking about frequency locking of rigs and transverters, hoping to eliminate one uncertainty when trying to make a microwave contact.

If you have not attended a GippsTech, then pencil in the second week in July, 2012 (date to be confirmed) for a visit to Gippsland.

Beacons

One piece of information gleaned from the discussions at GippsTech is that the local Gippsland beacons have been getting a major makeover in recent times. Ralph VK3WRE writes:

Some information on the VK3RGI beacons in Gippsland QF31ip. Recently, Jim VK3ZYC, Michael VK3ALZ and I completed the antenna work at our beacon site. We now have new antennas on all bands from two metres to 3 cm at a height of 15 metres.

The microwave beacons are up and running with the exception of the 3.4 GHz unit which is still under construction.

The two metre beacon runs 10 watts into a Halo. 70 cm has 10 watts into 4 phased Yagis. 23 cm has 10 watts into an Alford slot. 13 cm runs 10 watts into a slotted waveguide.

5.7 GHz is a one watt unit locked to a 10 MHz rubidium reference with waveguide feeding the slotted waveguide antenna. 10 GHz is running 1.2 watts locked to the 10 MHz rubidium reference with waveguide feeding a slotted waveguide antenna. The 5.7 and 10 GHz beacons are CW keyed with a one minute key down period and 30 seconds of CW.

All the beacons have the allocation .434 e.g. 2403.434 MHz, 5760.434 MHz.

The 10 GHz beacon has been

'seen' by Colin VK5DK over a 500 km path. Hopefully many more DX reports will come in.

We also have VK3RED on two metres in east Gippsland, at Donalds Knob, which has been running nicely for the past two years. VK3RED was installed to encourage ZL operators to look a bit further south to Victoria. VK3RED is on 144.436 MHz 10 watts CW.

Home microwave activity

There are an increasing number of stations who now have a permanent microwave setup at their home QTH. Alan VK3XPD, Russell VK3ZQB and Colin VK5DK have been having regular QSOs on 10 GHz for over a year, and they are now working on 24 GHz systems.

In Gippsland, Rod VK3BQJ is now operational on 10 GHz and 5.7 GHz. He writes:

After endless problems with rain and wind and more rain and more wind, I finally have the new 10 GHz gear up. It is running five watts to an 850 mm dish and GPS locked. The IF is an (unlocked) FT-290R. The VK3RGI beacon is pushing S9 since the recent rework.

With encouragement from Ralph VK3WRE and Jim VK3ZYC, I have got JT65c going and have worked Ralph over a 125 km path. Signals were almost SSB level on the night we tried two-way, shack to shack - I had seen him before one way. I am also seeing Jim but no two-way as yet - dish pointing problem at Jim's end and big pine trees. I am still learning the finer points of JT65c but starting to look at working a bit further.

I also have 5.7 GHz running – 10 W to a one metre dish, GPS locked.

Stop press: Activity on 76 GHz

Michael VK3KH and Alan VK3XPD set what is believed to be the first VK 76/78 GHz distance record over a path of 1.51 kilometres in the Melbourne suburb of Cranbourne on the morning of Wednesday August 3, 2011. I am sure that we will have more details in due course.

Please send any Weak Signal reports to David VK3HZ at *vk3hz@wia.org.au*

Digital DX Modes

Rex Moncur VK7MO

432 MHz FSK441

Congratulations to Adrian VK4OX and Arie VK3AMZ on completing a 432 MHz QSO using meteor scatter propagation on 31 July over a distance of 1447 km, which is believed to be the longest distance 432 MHz meteor scatter contact in VK and probably only the second 432 MHz meteor scatter contact in VK. Adrian VK4OX reports as follows:

On 30 July between 1830 UTC and 1910 UTC (Sunday, 31 July, 0430-0510 local time) I completed a successful FSK441A QSO with Arie VK3AMZ on 432.360 MHz. We used WSJT4 FSK441A because I believe it decodes shorter pings better than WSJT9.

We started at 1828 UTC and I was well on the way with a 900 ms burst at 1831 UTC. A few more pings and then an incredible 1500 ms 24 dB burst at 1857 UTC. Finally, a solid ping at 1909 UTC. Arie received my RRR at 1910.30 UTC.

The Delta Aquarids is hardly a great shower. We were just using it as preparation for the Orionids in October. I was not at all confident. We started on the previous Thursday morning, but Arie was having trouble receiving. On Friday morning I got 10 pings in an hour and a half but Arie was still in trouble. Saturday morning I received 7 pings in an hour and a half but still we could not complete. By Sunday morning Arie had things under control and we completed in about 40 minutes.

When I was in Sydney signing VK2FZ, I did have a 432MHz FSK441 QSO with Rex VK7MO, on 12 December, 2004, (Geminids). I think that was the first ever FSK441 QSO on 432MHz in Australia. I don't know if any other 432MHz meteor scatter QSOs on any other mode have ever been made. I would be interested to know. This QSO with VK3AMZ, QRB 1457 km, is my best distance so far.

Clearly, 432MHz FSK441 is a realistic proposition during shower activity.

144 MHz FSK441

Welcome to Kevin VK4UH who has joined in the weekend 144 MHz meteor scatter activity sessions on 144.230 MHz and completed with Arie VK3AMZ.

ISCAT-A

While ISCAT-A is still an experimental mode it can be downloaded at the following URL:
http://www.physics.princeton.edu/pulsar/K1JT/WSJT9_r2433.EXE

The original version of ISCAT is now called ISCAT-B. ISCAT-B is designed for ion-scatter and meteor scatter on six metres. ISCAT-A is specifically designed for microwave aircraft scatter and works well up to 10 GHz.

JT65a – Tropo-Scatter

JT65a is the most sensitive mode for tropo-scatter on VHF, being 1.2 dB more sensitive than JT65b. Rex VK7MO in Hobart runs JT65a skeds on 144.225 MHz most weekday mornings beaming towards Melbourne at 07:30 am Vic/Tas local time with Jim VK3II and Peter VK3SO. Peter VK3TPR and Richard VK3RR also join in. Other stations are welcome to join in, just call up or down 500 Hz to clear any contact in progress and once you are seen you will be called in.

Please send any Digital DX Modes reports to Rex VK7MO at *rmoncur@bigpond.net.au*

WIA Contest Website

To keep up to date with all of the major Australian contests, including rules and results, at the WIA Contest Website at:

www.wia.org.au/members/contests/about

Contests

Phil Smeaton VK4BAA

Contest Calendar for September 2011 – December 2011

September	**2/3**	**All Asian DX Contest**	**SSB**
	2/3	Region 1 Field Day	SSB
	11/12	Worked All Europe DX Contest	SSB
	17	Westlakes Cup	SSB, DSB, AM
	24/25	CQWW RTTY DX Contest	RTTY
October	**1/2**	**Oceania DX Contest**	**SSB**
	8/9	**Oceania DX Contest**	**CW**
	22/23	ARRL International EME Competition	CW/SSB
	29/30	CQWW DX Contest	SSB
	29/30	**CQWW SWL Challenge**	**SSB**
November	12/13	Japan Intl. DX Contest	SSB
	12/13	Worked All Europe DX Contest	RTTY
	19/20	ARRL International EME Contest	All
	26/27	**Spring VHF/UHF Field Day**	**CW / SSB / FM**
	26/27	CQWW DX Contest	CW
	26/27	CQWW SWL Challenge	CW
December	2/4	ARRL 160m Contest	CW
	4	RTTY Melee	RTTY
	10/11	ARRL 10m Contest	CW/SSB
	17	OK DX RTTY Contest	RTTY
	Dec 2011 to Jan 2012	**Ross Hull Memorial VHF Contest (VHF/UHF)**	**CW / SSB / FM**

Welcome to this month's Contest column.

Westlakes Cup

Hot on the heels of the All Asian DX Contest, Region 1 Field Day and Worked All Europe, the Westlakes Cup is scheduled to spark up the 80 m band with some inter-VK RF on 17 September. The full rules are elsewhere in this magazine, but this year features two bonus stations – one in VK2 and one in VK4. Sitting on a frequency and calling 'CQ' is not the go for this contest as a QSY of at least 5 kHz is required before calling 'CQ' again. The contest is only an hour's duration, so QSO time is limited. A 'cloud warmer' antenna is likely to be the best for this contest, so do not bother climbing the tower to tweak the twin five element 80 m beam stack as it is likely to be time poorly spent.

2011 WPX CW Contest – Claimed Scores

The claimed scores are out! VK has featured nicely in the listings, with an excellent smattering of VK CW being put to good use. Well done – I might see you in the melee in 2012, if I can polish my CW skills a bit.

SOAB High Power

VK4CT 5,531,242 (VK4EMM)
VK2IM 4,909,116
VK3TDX 3,088,416
VK2PN 952,840
VK7GN 692,545

SOAB Low Power

P29CW 1,392,516 (VK2GR)
VK3FM 148,716
VK4TT 79,980
VK7NET 715

SOSB15 Low Power

VK4EJ 35,192

SOSB40 QRP

VK2CCC 133,446

SOSB40 Low Power

VK8AV 131,716

IARU Contest

The bands were not the best I have seen for a while during this contest. 10 m did not seem to do anything noteworthy, whilst 15 m periodically raised a myopic eyelid but did not open hugely for prolonged periods. 20 m was reportedly either 'dire' or 'wonderful' according to where the reporter was located and when the band was utilised.

Steve VK3TDX made just under 700 Qs for a claimed score of about 652,000. Steve found 40 m to be nice and quiet for a change and put it to good use towards the end of the contest. VK5WIA (VK5CP) snared around 600 QSOs for a claimed score of just over 193,000.

Laurie VK7ZE was in the contest and had a weekend of mixed feelings to say the least. Laurie's main antenna could not be raised above 6 m as winds in excess of 100 kmh prevented this. The temperature did not help either, as the shack remodelling made for a larger space that required heating. Maybe if the ACMA could see their way to raising the VK licence power limit for CW, waste heat from an amplifier could be employed to thaw out Laurie's fingers! Laurie bagged just over 1200 Qs for a claimed score of a little over 740,000 points. A superb effort.

Steve VK6IR was in the contest, experiencing some strange band conditions over the weekend. 40 m was reportedly very poor on Saturday evening, but there was a good, short to EU on 20 m. By 0000 UTC Steve had managed to get to 460,000 points and thought that the contest was looking very promising. Unfortunately however, Steve spent Sunday working a few JAs on 15 m and listening to Laurie working long path EU stations that he could not even hear. The secret appears to be temperature related Steve – try contesting in the nude and locate the

station within a chest freezer to simulate Laurie's VK7 conditions. Don't bother emailing a picture of the station though Steve. Thanks.

Catherine VK4GH was on briefly and grabbed 64 QSOs but the tally featured a bevy of 21 HQ stations.

John VK4EMM was operating as VK4CT and netted over 1200 Qs for a claimed score of a bit over 1,122,000 points. John reported suffering from strong winds during the contest. John also reported mixed band conditions, but 40 m was the pick of the crop. 80 m provided good openings to NA and Asia, but only a few takers for Zone 55. John just needed a small opening on 10 m the reach a personal best for this contest, set in 2002, but that was not to be.

BERU results

The Radio Society of Great Britain (RSGB) created the British Empire Radio Union (BERU) in the late 1920s to support radio amateurs in the Empire. In 1930 a New Zealand radio amateur suggested that a week should be set aside as an 'Empire Radio Week' and that this should be held in February, 1931. This was the first BERU Contest. The contest proved to be very popular and has been held annually since then. It became known as the Commonwealth Contest in 1973. The 2012 contest will be the 75th.

No entry from Team New Zealand this year and, of the others, only Team Rest of the Commonwealth managed to field all their registered players.

Open Section VKs

Pos	Callsign	Score	QSO	BCA	80 m	40 m	20 m	15 m	10 m
11	VK2BJ	6285	557	99	34|25	149|48	248|47	109|40	17|15
34	VK6DXI	4205	389	79	37|14	107|41	144|28	94|23	7|7
42	VK4XY	3685	233	79	12|12	62|32	103|37	33|27	23|18
43	VK4BUI	3615	207	86	9|9	44|32	88|35	45|34	21|19
47	VK2NU*	3375	295	57	19|18	59|34	165|19	47|20	5|4
52	VK6BN	2920	188	67	29|17	103|40	44|30	9|9	3|3
79	VK4SN*	1900	144	35	13|12	40|33	91|14	0|0	0|0
84	VK6AJ	1760	88	47	0|0	31|26	29|16	22|18	6|6

*=12 hour section

Restricted Section VKs

Pos	Callsign	Score	QSO	BCA	80 m	40 m	20 m	15 m	10 m
13	VK4OQ*	2540	144	67	8|8	41|29	58|31	36|22	1|1
16	VK6HG	2350	118	61	11|10	42|30	38|25	23|19	4|4
69	VK8AV*	915	51	22	0|0	51|33	0|0	0|0	0|0
80	VK2EL*	640	32	17	2|2	6|6	19|11	5|5	0|0
105	VK4TGL*	200	8	6	0|0	4|4	4|4	0|0	0|0

*=12 hour section

Team Contest

1	Rest of the Commonwealth	65572	C4Z, J68PJ, J88DR, P3J, VP2MXF, VP2V/G3PHO, VP8NO, ZB2EO, ZC4LI, 8P6DR
2	Canada	63055	VO2AC, VE3EJ, VE3KI, VE3OI, VE3ZI, VE3KZ, VO1TA, VY2SS
3	Australia	46508	VK2BJ, VK2IM, VK4BUI, VK4SN, VK4XY, VK6BN, VK6DXI, VK8AV
4	UK	45485	G0IVZ, G6MC, G3LET, G3WPH, G5LP, G6PZ, GM0GAV, GM3POI, G0KPW
5	Africa	36899	V51YJ, 5X1NH, 9J2BO, ZS1EL, ZS6KR, ZS6C, 5H3EE, 5N7M
6	Asia	6215	9M6/VO1AU and VU2UR

If you have any contest related material for inclusion within the column, topics that you would like covered or even some experiences and pictures you would like to share, then please feel free to get in touch via vk4baa@wia.org.au. See you on the bands.

73 de VK4BAA.

The Westlakes Cup 2011

Leonie McGuiness VK2FHRK, Contest Manager, Westlakes Amateur Radio Club Inc.

Date: 17 September, 2011.

Time: 1030 UTC to 11.30 UTC

Band: 3.535 to 3.620 MHz

Mode: SSB, DSB, AM.

Maximum Power: 100 watts, Standard and Advanced licensees, 10 watts Foundation licensees.

Rules: All stations to call "CQ Westlakes Cup." Exchange shall be operator's name and a signal report. After a contact is made and reports exchanged, the station that had called "CQ" must QSY at least 5 kHz before calling again. There will be no sitting on a frequency and working a "pile up."

Valid Contacts: Only VK or special prefix (AX, VI) Australian stations may be worked.

Points A: There will be two BONUS stations operating in the contest. The BONUS stations are those that hold the cup from last year's contest. The BONUS stations are worth one point

for the QSO plus three bonus points and may be worked twice, once in each half hour. For 2011 the BONUS stations will be VK4ZD/BONUS and VK2FHRK/BONUS.

Points B: Amateur radio club stations taking part are worth one point for the QSO plus one bonus point. Club stations may only be worked once.

Points C: All other stations are worth one point and may only be worked once.

Points D: SWLs can claim the same points as transmitting stations.

Contest Procedure: At 1015 UTC on 3.585 MHz +/-QRM, BONUS station VK2FHRK shall make an announcement outlining the contest rules and greeting participants. Any questions will be answered at this stage.

Contest Logs: Should contain the following: **Cover Sheet** showing the entrant's call, name, station address, email address (optional), points claimed, and the declaration, "I declare I have operated within the rules and spirit of the contest and in compliance with my licence conditions."

The Log should show: UTC time, station worked, call, the name of the operator of the station worked, and exchanged signal reports.

Awards: Inscribed cups shall go to the stations with the highest points - one cup for the Standard/Advanced section winner and one cup for the Foundation section winner. The two winners will be the BONUS stations for next year's contest. Certificates will be awarded to first, second, and third place getters in each section, Standard/Advanced, Foundation and SWL.

Logs should be sent to: The Contest Manager, Westlakes Amateur Radio Club Inc, Box 3001, Teralba. NSW. 2284. The closing date for logs is Saturday, 29 October, 2011.

Winter VHF-UHF Field Day 2011: Results

Contest manager: John Martin VK3KM

The Winter Field Day saw a good level of activity, although participation was down in some of the colder parts of the country!

An interesting feature is that three of the sections have been won by VK5 stations, and this time the rover section was dominated by VK2 stations. Congratulations to all for braving the elements.

Call	Name	Location	50 MHz	144 MHz	432 MHz	1296 MHz	2.4 GHz	3.4 GHz	5.7 GHz	10 GHz	24 GHz	47 GHz	TOTAL
Section A:	**Single Operator, 24 Hours**												
VK5ZD	Iain Crawford	PF95, PF96	33	339	585	912	770	840	610	930	320	-	5339
VK5TX	Ben Hennessy	PF95	25	366	500	432	-	-	340	-	-	-	1663
VK3VCL	Wayne Bruce	QF22	-	525	495	512	-	-	-	-	-	-	1532
VK4TGL	Gerard Lawler	QG61, QG62	65	270	425	-	-	-	-	-	-	-	760
VK5AR	Alan Raftery	PF95	56	279	370	-	-	-	-	-	-	-	705
VK3VL	David Harms	QF33	-	186	165	-	-	-	-	-	-	-	351
VK2FWB	Fred Baker	QG50	-	204	135	-	-	-	-	-	-	-	339
Section B:	**Single Operator, 8 Hours**												
VK5KK	Dsvid Minchin	PF95	27	231	315	632	210	700	460	560	-	-	3135
VK3XPD/4	Alan Devlin	QG62	21	153	175	392	330	220	220	220	210	-	1941
VK5NI	John Ross	PF85, PF95	34	198	250	272	330	320	220	210	-	-	1834
VK3QM	David Learmonth	QF21	33	207	280	304	220	220	220	330	-	-	1814
VK3KH	Michael Coleman	QF21	-	357	280	400	340	-	-	220	-	-	1597
VK5TX	Ben Hennessy	PF95	23	297	440	400	-	-	330	-	-	-	1490
VK4GHZ	Adam Maurer	QG61	37	252	260	312	340	-	-	-	-	-	1201
VK3YFL	Bryon Dunkley-Smith	QF22	48	183	220	304	-	-	-	340	-	-	1095
VK3HY	Gavin Brain	QF22	60	111	175	272	-	-	-	320	-	-	938
VK4ADC	Doug Hunter	QG61	64	168	265	312	-	-	-	-	-	-	809
VK4CZ	Scott Watson	QG62	-	222	215	-	-	-	-	-	-	-	437
VK4JAZ	Grant McDuling	QG62	-	61	45	-	-	-	-	-	-	-	106

Section C:	**Multi Operator, 24 Hours**												
VK5LZ	Elizabeth ARC .	PF94, PF95	40	432	480	728	-	730	590	690	-	-	3690
VK3ALB		QF21	57	558	555	680	410	220	220	380	-	-	3080
VK4WIS	SCARC	QG63	133	549	470	552	-	-	-	-	-	-	1704
VK4WIE	CBRS	QG62	103	408	510	528	-	-	-	-	-	-	1549
VK2BOZ		QF68	98	405	530	304	-	-	-	-	-	-	1337
VK3YVG	Yarra Valley ARG	QF22	84	219	295	-	-	-	-	-	-	-	598
VK1MAT		QF44	28	195	180	-	-	-	-	-	-	-	403
Section D:	**Multi Operator, 8 Hours**												
VK3ALB		QF21	46	384	330	448	340	220	220	330	-	-	2318
VK4IZ	RDRC	QG62	52	168	260	320	340	210	220	210	220	-	2000
VK3BJA	GGREC	QF21	21	174	180	-	-	-	-	-	-	-	375
Section E:	**Home Station, 24 Hours**												
VK3MY	Ross Keogh	QF22	78	393	465	592	380	-	-	-	-	-	1908
VK3VFO	Nick Kraehe	QF31	62	588	670	384	-	-	-	-	-	-	1704
VK4VDX	Roland Lang	QG62	47	396	520	528	-	-	-	-	-	-	1491
VK5NE	Paul Roehrs	PF95	66	312	475	536	-	-	-	-	-	-	1389
VK5AKM	Keith Minchin	PF95	36	69	210	424	-	590	-	-	-	-	1329
VK5TE	Simon Brandenburg	PF94	-	252	365	392	-	-	-	-	-	-	1009
VK5LD	Dale Loffler	PF96	43	288	315	344	-	-	-	-	-	-	990
VK2NR	David Porter	QF56	40	198	300	440	-	-	-	-	-	-	978
VK3BQ	Andrew Scott	QF22	22	219	280	360	-	-	-	-	-	-	881
VK5AIM	Steve Mahony	PF95	41	174	255	384	-	-	-	-	-	-	854
VK2EI	Neil Sandford	QF68	38	192	150	184	210	-	-	-	-	-	774
VK4KLC	Ron Melton	QG62	63	282	390	-	-	-	-	-	-	-	735
VK3NFI	Dean Webster	QF31	31	243	175	200	-	-	-	-	-	-	649
VK1JA	Jayson Meli	QF44	27	306	170	-	-	-	-	-	-	-	503
VK5FPAW	Paul Schulz	PF95	-	204	285	-	-	-	-	-	-	-	492
VK3WAM	Wayne Merry	QF22	-	198	265	-	-	-	-	-	-	-	463
VK5VAB	Bruce Gauci	PF95	35	183	225	-	-	-	-	-	-	-	443
VK3TOM	Tom Steadman	QF31	32	183	215	-	-	-	-	-	-	-	430
VK2AWX	Hunter Radio Group	QF57	51	171	180	-	-	-	-	-	-	-	402
VK1PAR	Al Long	QF44	15	213	120	-	-	-	-	-	-	-	348
VK4ZW	Raymond Buck	QG62	23	108	190	-	-	-	-	-	-	-	321
VK4EV	Ron Everingham	QG62	37	141	-	-	-	-	-	-	-	-	178
Section F:	**Rover Station, 24 Hours**												
VK2GG	Dan Joyce	QF56, QF57, QF58, QF67, QF68	117	354	590	936	-	1170	1170	1170	1170	1170	7847
VK2TRF	Jack Swart	QF56, QF57, QF58, QF67, QF68	117	354	590	936	-	1170	1170	1170	1170	1170	7847
VK5ZT	Tim Dixon	PF84, PF85, PF86, PF94, PF95, PF96	33	375	615	888	760	1040	320	930	320	-	5281
VK2TDN	Dave Nelson	QF55, QF56	82	348	565	688	560	-	-	470	-	-	2713
VK2CQ	Dave Maloney	QF55, QF56	73	330	530	640	560	-	-	460	-	-	2593

Notes

VK1MAT Matthew Bowman VK1MAT, Shane Goodwin VK1MAD

VK2AWX Hunter Radio Group: VK2SH Geoff Wrightson, VK2FWJL Wayne Lawrence, VK2FERM Craig Murnane, VK2OI Michael Clarke, VK2FA Grahame O'Brien, VK2VV Graham Brice, VK2CLH Charles Hunt

VK2BOZ Cris Perrett VK2BOZ, Doug Tufrey VK2FWWD, Brenda Taylor VK2FSMI

VK3ALB Lou Blasco VK3ALB, Nik Presser VK3BA, Peter Westgarth VK3APW, Jenni Blasco VK3FJEN, Michael Blasco VK3FMIC

VK3YVG Yarra Valley Amateur Radio Group: VK3ABJ, VK3PPC, VK3DAC, VK3VWW, VK3HKB

VK3BJA Gippsland Gate ARC: Mike Ide VK3KTO, Graham Brown VK3BXG

VK4IZ Redliffe and District Radio Club: Kevin Johnston VK4UH, Colin Hutchesson VK5DK/4

VK4WIE City of Brisbane Radio Socviety: VK4MJF, VK4KSY, VK4CRO, VK4NE, VK4FABD

VK4WIS Sunshine Coast ARC: Glenn VK4FSCC, Richard VK4RY, Ches VK4WT, Bill VK4XZ, Geoff VK4KEL, David Carr

VK5LZ Elizabeth ARC: VK5ADE, VK5KX, VK5AKH

ALARA

Margaret Blight VK3FMAB – Publicity Officer

Some of you may wonder why sections of the news in this article seem a little dated. I can only extend my apologies to everyone who missed the ALARA column in last month's magazine. We rely so much on technology these days and when something as simple as sending an email becomes fraught, then the commonplace begins to crumble. I have learned, to my horror, that while emails and responses to emails have been flying off my computer at their usual rate, none of the messages were actually arriving at their destination. As a result, last month's ALARA news left its home address and disappeared into some mysterious place in cyber space. Information technicians have yet to discover the cause and/or the cure for this peculiar symptom. So I have my fingers crossed about the next column arriving and have taken steps to ensure all goes well this time.

So dear readers you are being given a combination of the last and the present month's ALARA column. I hope you enjoy it.

Recently the OM and I enjoyed a brief trip to Bright which was beautiful in late autumn, and later travelled on to Alexandra to stay with friends. We both noted how lovely the countryside looked and how enjoyable it was to see the greening of the landscape after so much drought in country Victoria. While in Alexandra we were taken to visit the town of Marysville. This was the first time we had been there since the terrible bushfires of 2009. It is possible to watch the regrowth struggling to emerge in the surrounding countryside while some signs of renewal are evident in the centre of the town. However, it is very much a work in progress. We should not forget how much such disasters are affecting our country cousins.

I learnt that although there are still day visitors arriving, few are staying overnight. The Bakery Café offers a good place to stop for a drink and snack and it is interesting to note the efforts being made to rebuild some of the homes that were lost. We were given the information that over 350 houses were lost during the fire and at present 144 houses are somewhere between foundation to completion. We could see the temporary accommodation that many families were still living in and realize there is much more to be accomplished to return Marysville to a semblance of what it once was, a very popular tourist destination.

We met up with the local Postman who also runs the Post Office and adjoining gift shop. He can even rustle up a nice cup of coffee. Sadly he could not recall seeing any signs of radio amateurs on his rounds (no aerials, apparently) even before the fires.

We would like to encourage anyone thinking of visiting this area to call in to Marysville and support the local businesses.

News from VK2, from Dot VK2DB

Dot informs us that she and her OM John VK2ZOI went to the Port Macquarie Field Day over the weekend. What a wet and sloppy time they had there! 'It rained, actually bucketed down all the way up and, although driving straight, the car aquaplaned a few times. Thank goodness we had a nice warm, cosy motel room to bunk down in on arrival. I'd guess that over 50 Field-dayers attended the dinner at the golf club on Saturday night; beaut meal, great company with lots of chatter and laughs. On Sunday, the ALARA table was set up at the Tacking Point Surf Club right beside two very nice OMs from VK4 ICE Communications. They had a beautiful purple aerial, not my frequencies but I would have loved it anyway! Purple is my colour, which I demonstrated by showing them my purple mobile phone.

Carol VK2FCRS was on her table on the opposite side of the room and we were able to have the occasional chat, always great to meet up with Carol. The 'lady at the door' was Ailsa Brooke VK2FABJ who is extremely good at CW. I would like her to meet Pat VK3OZ and Lyn VK4SWE on air one day. I am sure they would all enjoy the contact - maybe the ALARA Contest. Ailsa used to live in WA and sends her good wishes to Bev VK6DE.

From the surf club we could look out across the ocean, and watched a pod of whales frolicking as they went north. Oh, they were gorgeous! They spouted, belly flopped and turned circles. Missed getting photos, was too slow, so stopped trying and just enjoyed watching them.

Coming home on Monday we left in heavy rain and aquaplaned down to Taree. About 10 km south of Taree the rain stopped, the road was dry and there were shadows, not exactly sunshine but very close. Rain started again near Newcastle and we arrived home in a torrential downpour. We had thought of continuing up to Queensland to see our son and our grandchildren after the meet as we usually do, gee I'm glad we didn't.

Photo 1: The ALARA table and Maria VK5BMT.

Ian would have been delighted to have us until the floods cleared and would have found a lot of work for us to do - digging trenches.

Maria VK5BMT was in Sydney to see her grandchildren and we managed to squeeze in a day together. I took her to Brooklyn to sit and watch the boat traffic on the Hawkesbury River while we ate hot salty fish and chips. The weather was terrible and we sat fogging up the car, plus there was not a lot of activity on the river. After lunch we were able to go for a short walk between showers.

For the last few weeks I have frequently been taking my step father-in-law to doctors and hospitals. At one visit, while in the doctor's surgery I tried to ring OM John to look up some paperwork for the doctor but he did not answer the phone. I had 2 m in my handbag so called him on the local repeater. He answered straight away, found the information and boy, was the doctor impressed! The next 10 minutes were spent explaining about amateur radio.'

Well congratulations Dot, not only have you given us a great example of how true radio enthusiasts will persist in their activities despite inclement weather, you also give a great example of creating an opportunity to demonstrate the practical use of amateur radio.

News from VK3

At the recent AGM of the Eastern & Mountain District Radio Club, Jean VK3VIP received a Certificate in appreciation of her ongoing contribution in providing drinks and refreshment at the Club's meetings. We certainly agree Jean deserves recognition for her dedication.

News from VK5

Christine VK5CTY has sent news about further volunteer community work by radio operators. The June long week-end brings the Marathon Canoe Club of SA premier event, the Riverland Paddling Marathon (RPM). The RPM incorporates the Murray 200, the Murray 200 Relay, the Murray 100 and the Riverland mini-marathon. The three day event runs from Berri to Morgan with a portage each night.

Jenny VK5FJAY takes part along with other radio amateurs. She finds it very useful for the radio exams they are struggling to prepare for. Lea VK5FKSA is the YL who started the Scout Radio Activity group several years ago and is the caretaker of ALARA'S Florence McKenzie Trophy.

The Scout Radio Activities Group (SA) (SRAG) provided hand held radio communication at water level along the 200 km stretch of the river. Typically the SRAG team consists of about 20 people who provide radio checkpoints as well as setting up and operating a communications system and van.

Four ladies helped run the communication van, and also at check points - getting up very early (0500) to be on the water's edge by 0600 to 0630 to send back the boat numbers to the communications van, which was based at Waikerie until the last day when it was moved to Morgan for the finish.

EchoLink - The radio you're using when you've got no antennae

Shirley VK5YL

Like a lot of amateurs I didn't find this wonderful hobby until later in life, long after full time work and twins. Others of our ilk found this hobby very early in life and now live in homes where it is impossible or impractical to erect an antenna of any kind. How to keep our licence and still talk to the world?

I'm fortunate in that we have a G5RV antenna stretched across our block and am able to contact people world-wide, but had a problem when I first tried to contact my sponsor in Canada (who belongs to CLARA, of course). I belong to ALARA and joined back in 2001 when the air waves were not much good, so my friend June told me. 'They will get better' she kept telling me until now the sun spots seem to be in our favour. I eventually made HF contact with VE1PK Audrey and VE3DBQ Minnie after four months of trying every week. Audrey then suggested that I try EchoLink. Well, as Audrey is many years my senior and was able to give me some help, I thought 'if she can do it then so can I'. So I finally downloaded the EchoLink programme.

You have to have a current licence as your name and credentials are checked with a real person, not a computer. This website will take you directly to the EchoLink information and download page - http://www.echolink.org/ You now have the means of communicating world-wide with any amateur via the computer and/or a two metre station. The link via computer is very easy and all you need is a microphone and speakers. If you prefer to use a two meter radio, it must have a DTMF keypad. This keypad allows you type in the IRLP node number which will connect you to a repeater somewhere in the world, hence locally to any user operating on that station (CQ Chicago, CQ Chicago...). We once had a QSO with a friend in the UK via that medium.

Like HF, one can only contact another station if they happen to be logged in to the software, the same as switching on your own rig. Only call signs and the QTH are displayed on the EchoLink screen which is more information than via HF normally. Oh yes, EchoLink or IRLP does not cost anything to join and use, so just download the programme on to your computer.

So, have a go and join in the fun. Catch you further down the log.

Thanks for the information Shirley I hope a number of our readers do follow your advice and 'Give it a go".

Handy workshop hints

My OM Andrew VK3FBA has for a number of years been an Electronics Service Technician, now recently retired. Readers might be interested in some of the suggestions and hints he has gathered to make life a little easier when attempting any repairs to equipment.

- Nothing has ever been fixed by randomly twiddling preset pots, trimmers or coils. If you have the overwhelming urge to do so, then mark the initial position with a fine felt tip pen so some sort of order can be restored when you finally decide to start looking for the real reason it doesn't work.

Photo 2: Soldering class at EMDRC.

- Use plastic caps from aerosol cans as temporary screw holders while you are working on something. If they are all kept together it saves the loss of that one vital screw.
- Acetone and cotton buds are a good way to clean circuit boards and they are cheap as well. Much less expensive than commercial flux remover.
- If it isn't broken, don't fix it.
- If you don't know how to solder, then learn before you decide to start on your $1000 radio. Soldering is a trade skill, it is not intuitive. Get some old circuit boards from a scrap TV or VCR and practice soldering and de-soldering using solder wick. (Enquire at your radio club if/when they may be running a demonstration course on soldering. A course was run at the EMDRC in Melbourne which was very well received and half the participants were female operators).
- A small plastic fruit juice bottle makes an ideal soldering sponge water container. The type I refer to has a push down locking top, so if it goes over sideways it doesn't spill. I suggest keeping it behind the soldering iron so the tip-wiping sponge can always be wet.
- If it's too hot to touch, it's too hot!
- The first rule of fault finding is "check the power supply".
- The second rule of fault finding is "check the power supply" etc. etc.
- If your VCR or DVD doesn't work and you have young children (or grandchildren visiting) then remove the top cover and have a look inside – there's a good chance you will find a foreign object. I have found coins, plastic toys from McDonalds, vegemite and peanut butter toast, fruit sticks, teething rusks, and sundry other items.
- Remember, it is only a hobby. There is great satisfaction in completing a successful repair, so good luck.

News from the ALARA President

Tina VK5TMC and OM Robert VK5ZHW have just returned from a six week trip to the United States and the Bahamas.

Our trip was fairly busy, starting in Atlanta, Georgia and driving to Dayton for the Hamvention. The Dayton Hamvention was amazing, as always. We caught up with lots of friends and made many others. Of particular note were Connie DF8FM and Horst DL2GA from Germany and Lois WB3EFQ, president of YLRL and Anne WB1ARU, past president and organiser of the YLRL convention in Boston this July, Ann Nutter VE3HAI, president of CLARA and Nancy KC4IYD who I sponsor into ALARA. We shopped until we dropped but did not find much that was worth risking excess luggage charges to buy. We had dinner every night at various local eateries with different groups. It was a fun three days.

In Chattanooga, Georgia we saw Ruby Caves, a cave with a 44.5 metre water fall which is 335 metres under the surface. The cave had lots of stalactite and stalagmite formations which were beautiful.

We visited Glen Ridge, Tennessee which was the Second World War secret site where a lot of the design work was done on the atomic bomb. At one time there were 70,000 people working at a secret site and they pretty much keep it a secret. The museum was very well presented.

We headed for Washington DC next using minor highways to see a bit more of the countryside than you do on the freeways. We used the Metro train system to get into the centre of Washington DC the next two days. The weather was very hot but we did manage to see the Aerospace Museum and do a tour of the area. We also went into Union Station for lunch one day. Two days of city were enough for us and we headed out to Chesapeake Bay for a bit of sightseeing on our last day in the area.

We stopped at Shenandoah Caverns on Saturday which was another magnificent cave. There is also a Float Museum with lots of floats from parades around America at the caverns which was very interesting.

The Sunday found us on the Blue Ridge Parkway which is a scenic byway from Shenandoah National Park in Virginia to Smoky Mount Park, Tennessee built as part of the recovery efforts during the depression. A lot of the parkway is on top of the range of mountains that run between the two parks. We didn't get very far in a day but we were amazed by the constant dark green of the area and the beauty

We arrived back in Atlanta on the Monday evening and happily returned the car early. Driving through Atlanta there was, at times, 12 lanes of traffic going in one direction and we hit the city about 5.30 pm. Talk about a hick from Australia being out of her depth. We again used the public transport, this time called MARTA, to go into the city going to the World of Coca-Cola and the aquarium. How many flavours of Coke are there and we could try them all if we wished and the aquarium was amazing, being the largest in the world, so the Yanks say! The weather continued to be hot.

Orlando was our next stop. We headed for the west coast of Florida which was an interesting drive making for DisneyWorld Hollywood Studios on the Monday, which was also one of the hottest days we had. Tuesday we headed for Kennedy Space Center early so we could see as much as possible. We were not disappointed! We chose the longer tour and were able to get just a mile from the launch site with a space shuttle sitting on it ready for the last shuttle launch in July. We put in a full day enjoying the two IMAX

3D shows about the Space Station and the Hubble Telescope and the launch simulation. We decided to return the next day on our way to Fort Lauderdale to see what we had missed, including the Astronaut Hall of Fame. It was a little out of our way but well worth the diversion.

Our next stop was Fort Lauderdale for two nights. We went to downtown Miami to do a cruise around the port seeing some of the homes of the rich and famous. They were certainly impressive but all I could think of was why anyone would pay up to 58 million for a place where people ride past in tour boats every few minutes to gawk at you. Most were totally exposed to the water and nosey people like us.

We arrived in good time for the cruise and after what seemed like a million checks and sign-ins we were on board. Nassau was interesting and the Pirates Museum was very well presented. But it was very hot and humid. I said before we left we would buy no white t-shirts as we have far too many but we each bought three for $10 because the heat was getting to us and we needed cooler clothes.

Next we were off to Las Vegas. We walked down the Las Vegas Boulevard to Casino Royale and then took the monorail back to close to the hotel. It was really hot - over 38. I set out to lose $1 on the slot machines and with Robert's help we won $3.

Our trip finished with a week in Seattle for a family reunion and visiting a friend from Adelaide who had moved there 10 years ago. The weather in Washington state was quite a bit cooler and we were thankful of the cool change.

Now, for the September news...

Update on YL International Meet 2012 – from ALARA President TINA VK5TMC

We now have the final price for the YL International Meet next year in Adelaide. The price of the Ghan tours are less than the estimates: $4500 per person for the nine day adventure and $3100 for the seven day adventure. All prices are now firm. If for some reason you are unable or just do not want to do all of the meet just let me know which parts you want to do and we will organise everything from this end.

I believe I have sent an updated invoice to everyone who has registered. If you did not receive the invoice please contact me as my computer system is running really badly at the moment.

I have been asked to get a price for the motels without breakfast, which is a saving of $15 or $16 per person for a full cooked breakfast, depending on the motel.

I am in the process of trying to work out a time(s) to have an EchoLink sked(s) using the ALARA station to allow us to chat. I am thinking that we would have to have several times to allow most people to be able to get in at a reasonable local time. I have decided on the second Tuesday of the month, which is 9 August, at the three times listed in the chart below. Hopefully that will give a time which is suitable for most who want to touch base with those attending the meet. You don't have to have questions or concerns although we will certainly deal with any that come up in conversation. If no one is there after 10 minutes we probably won't be there by a quarter past the hour.

The times, all UTC, are 0500, 1100 and 2200.

If you are thinking about what else you can/will do in Australia while you are here there are some free travel brochures to download at www.travelbrochures.com.au You can check everything out at *http://www.ylinternational2012.com* I hope you are all working on your plans for the meet and looking forward to it as much as I am.

News from VK3

The Eastern and Mountain District Radio Club (EMDRC) enabled an educational workshop to be run at the clubrooms on Sunday, 10 July. The topic was to learn how to make an antenna using the most basic materials. On the day the participants learnt how to make a working antenna using wire coat hangers and a broom handle or tomato stake. Jean VK3VIP and Margaret VK3FMAB were present and very interested in what was taking place and listened with interest to the experiences of members who had put such antennas successfully to work.

On 16 July Gippsland Gate Radio & Electronics Club (GGREC) held their annual HamFest at the Cranbourne Public Hall. This is an event that draws a good attendance

Photo 3: L to R - Susan VK3UMM, Pat VK3OZ, Michi VK3FMGE, Jean VK3VIP, DianeVK3FDIZ, Maree VK3FSAT, and Naree.

and in a gesture of goodwill a number of ALARA members volunteered for kitchen duty. The weather was fine which encourages even more friendly contact. A camera opportunity managed to capture some of the ALARA members on the day.

A number of ALARA members and their OMs from the EMDRC club attended a 'Christmas in July' evening at the Mountain View Hotel. A good time was had by all and it is gratifying to be able to eat traditional Christmas Fare when the weather was cold.

News from VK2, from Dot VK2DB

Dot sends us information on an interesting ALARA member. She says in her own words...

'I think Joan VK3BJB has been a great ambassador for YLs in radio. Earlier this year Joan received a letter from Japan and was pleasantly surprised to find it was from a friend she hadn't heard from for almost 20 years. Atsumi Haraguchi, 72, and Joan had their first contact in the early 1970s but over the years had lost contact. In fact when she received the letter, although the name felt familiar, she had to go through her log to work out who he was. Their last contact was in 1994 and as Atsumi was working overseas and couldn't be on radio, they had not communicated since. Atsumi had heard of the terrible floods earlier this year and was so worried that he decided to write to make sure she was OK.

Joan's radio life has been anything but dull. Over twenty years ago she heard a distress call from a Japanese yachtsman off the coast of north Queensland. She kept in contact with him almost non-stop for three days while a rescue helicopter organised a tow-line to a game fishing boat which towed him to safety. The yachtie and Joan made world news then and again four years later when he visited Melbourne and was able to meet her.

Joan learnt to speak Japanese because she spoke to so many Japanese fishermen and others on the maritime mobile net on air. She even became a full-time Japanese maritime net controller. One of Joan's memorable contacts was with Ray 9M2TR and because her OM was Ray, this new Ray was called Ray Junior. Later she found out that Ray Junior was actually His Royal Highness Prince Tunku Abdul Rahman, one of the sons of the Sultan of Jahore.

Photo 4: L to R - Jean VK3VIP, Micheline VK3FMGE, Cristina VK3FCRS, Margaret VK3FMAB and Carla.

One of her regular Japanese radio contacts wanted to have a full white Australian wedding and asked Joan to arrange it in Mildura where she lives - most Japanese who come to Australia for their wedding want it held in Cairns or the Gold Coast. Joan arranged the whole lot, even the wedding dress and the local council put on a special civic reception for the newlyweds.

Joan spent so much time talking to ships captains, airline pilots and policemen that she was made an honorary member of the Salt Lake City, Utah, Police Department.'

Silent Key Neil Trainor VK3IJ

Neil was born at Jeparit in 1924. He died on 22 July, 2011 just a few days after his eighty-seventh birthday.

Neil was an enthusiastic member of the Wireless Institute and of the Old Timers. Apart from amateur radio, one of his main interests was the design and building of pipe organs.

I quote a contribution from Bill Magnusson VK3JT, who has had a longstanding association with Neil: *"We first met at the then Footscray Technical College, later to become the Footscray Institute of Technology and still later the Victoria University. Neil was working as a technician in the audio/visual department and we became firm friends at our first meeting.*

Neil was heavily involved at a technical level in the first experiments using redundant US communication satellites as vehicles for interactive classroom lectures between US Colleges and the FIT. That was in the late 1960s and was, I believe, an Australian first. His WW-2 radar experience fitted him very well for this exercise.

In later years Neil and I spent time heavily involved in the radio club at RAAF Williams Base, Laverton. Neil started and ran the AOCP classes for many years. I was helping him to run the Novice classes at that time when Brenda VK3KT, the then WIA Education Officer asked us to help in what became a long-term project to completely revamp the AOCP examination question database. Neil was always a stickler for theoretical accuracy and his input was vital to that project.

Since retiring to Milawa in north-east Victoria, Neil and I retained our friendship via amateur radio and many personal meetings with him and his wife Anne on my visits to Melbourne. Sadly Neil's health had not been the best for a number of years and a series of strokes ended his active amateur days earlier this year. We kept in touch by phone until shortly before his confinement to 24 hour care. Neil will surely be missed for his warm friendship, his dogged pursuing of fine technical detail and above all his readiness to help others".

Neil leaves a wife, Anna, sons Bart and John, and a daughter Marianne. We extend our condolences to them all.

Vale Neil.

Contributed by Brenda Edmonds VK3KT and Bill Magnusson VK3JT.

Pierce Healy VK2APQ, Honorary Life Member of the WIA, is 100 years old!

Peter Wolfenden VK3RV – WIA Historian

Photo 1: Pierce Healy at VK2MZ, the Hurstville Amateur Radio Club station, c. 1936. Courtesy of Pierce Healy VK2APQ.

VK2APQ and the name Pierce Healy are well known within Australian amateur radio circles.

In the past, Pierce was very active in the WIA at both State and National levels, but perhaps he is best remembered amongst the 'old-timers' for his regular 'Amateur Radio Notes' which were published monthly in *Radio and Hobbies* (Est.1939) – changing name in the 1950s to *Radio, Television and Hobbies* and still later becoming *Electronics Australia* (1965). The column, originally written by Bill Moore VK2HZ, was continued by Pierce for about 20 years resulting in his notoriety not only within Australia but by virtue of the magazine, he was also well recognised overseas, often being greeted as a well-known friend by foreign amateurs on the air.

Prior to WWII, Pierce was an associate member of the WIA. The Hurstville District Amateur Radio Club had difficulties finding a suitable home for its station VK2MZ and Pierce offered the use of a shed in his back yard. The war intervened, all amateur stations were closed down and Pierce became deeply involved in aircraft design and production at Hawker De-Havilland where he remained for some 30 years, finally ending up in planning and management.

Although having sat for an amateur licence prior to the war, Pierce never actually received it due to the outbreak of WWII. It was not until 1958 that time permitted him to re-sit the licence exams and as VK2APQ he became quite active, initially on VHF. He designed and built his own equipment which was proudly used on many field days and for working two metre DX.

Pierce joined the NSW VHF and TV Experimenters Group and the rest, as they say, is 'history'! After a two year term as WIA NSW President and VK2WI newsreader, Pierce went on to be VK2 Federal Councillor attending some 10 Federal Conventions. He was also involved in the Disposals Committee activities of the NSW Division which made surplus WWII equipment available to many Australian amateurs. Pierce was a proponent for establishing the IARU Region 3 organisation in 1968 and was also heavily involved with the Youth Radio Club Scheme.

Photo 2: VK2APQ April, 2011. Photograph by Peter Wolfenden VK3RV.

Photo 3: WIA 32nd Federal Convention and Inaugural Meeting of IARU Region III at Sydney, April, 1968. Pierce Healy VK2APQ had just welcomed delegates, including those from overseas, to Sydney. He is standing to the left of Federal President, Maxwell Hull VK3ZS. Source WIA Archive.

He also had an interest in RTTY and the ANARTS (RTTY) group.

A friendship developed between Pierce and Dick Smith resulting in involvement with the 1981/1982 Dick Smith Explorer Mawson operation and other Dick Smith activities. Pierce was also involved with the amateur radio station VK2BQK at the Museum of Applied Arts and Sciences. In 1985 VK2BQK moved from Ultimo to the new Power House Museum. A major re-design of the station took place and Pierce became the station's custodian, overseeing the extensive works carried out by museum staff and volunteers that were necessary to re-establish the popular station.

Photo 4: Front cover of AR, September, 1985 featuring Power House Museum Station VK2BQK.

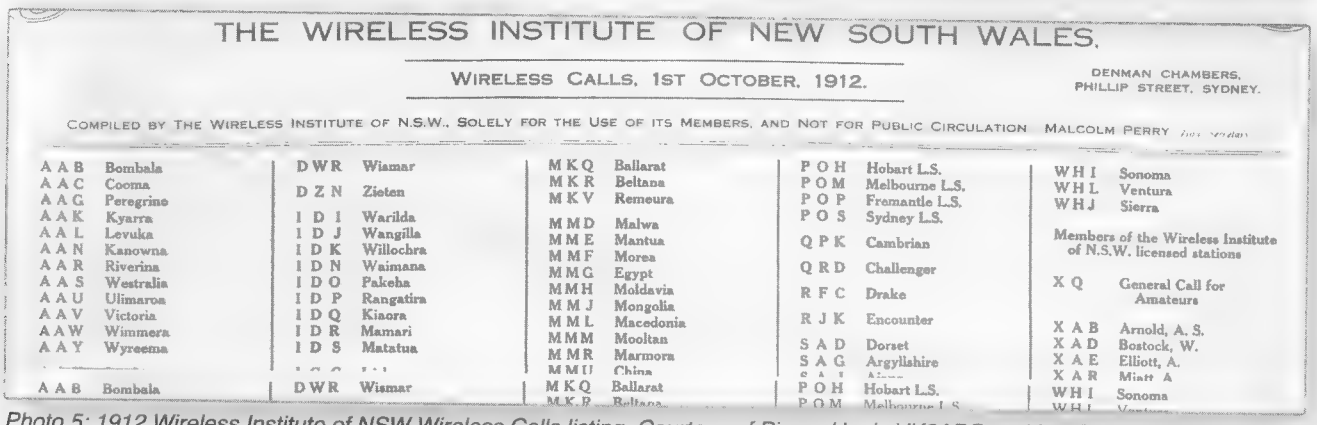

THE WIRELESS INSTITUTE OF NEW SOUTH WALES.

WIRELESS CALLS, 1ST OCTOBER, 1912.

DENMAN CHAMBERS, PHILLIP STREET, SYDNEY.

COMPILED BY THE WIRELESS INSTITUTE OF N.S.W., SOLELY FOR THE USE OF ITS MEMBERS, AND NOT FOR PUBLIC CIRCULATION. MALCOLM PERRY

A A B	Bombala	D W R	Wismar	M K Q	Ballarat	P O H	Hobart L.S.	W H I	Sonoma
A A C	Cooma	D Z N	Zieten	M K R	Beltana	P O M	Melbourne L.S.	W H L	Ventura
A A G	Peregrine			M K V	Remeura	P O P	Fremantle L.S.	W H J	Sierra
A A K	Kyarra	I D I	Warilda			P O S	Sydney L.S.		
A A L	Levuka	I D J	Wangilla	M M D	Malwa				Members of the Wireless Institute of N.S.W. licensed stations
A A N	Kanowna	I D K	Willochra	M M E	Mantua	Q P K	Cambrian		
A A R	Riverina	I D N	Waimana	M M F	Morea	Q R D	Challenger	X Q	General Call for Amateurs
A A S	Westralia	I D O	Pakeha	M M G	Egypt	R F C	Drake		
A A U	Ulimaroa	I D P	Rangatira	M M H	Moldavia	R J K	Encounter	X A B	Arnold, A. S.
A A V	Victoria	I D Q	Kiaora	M M J	Mongolia	S A D	Dorset	X A D	Bostock, W.
A A W	Wimmera	I D R	Mamari	M M L	Macedonia	S A G	Argyllshire	X A E	Elliott, A.
A A Y	Wyreema	I D S	Matatua	M M M	Mooltan			X A R	Miatt A
				M M R	Marmora			W H I	Sonoma
A A B	Bombala	D W R	Wismar	M K Q	Ballarat	P O H	Hobart L.S.		

Photo 5: 1912 Wireless Institute of NSW Wireless Calls listing. Courtesy of Pierce Healy VK2APQ and Ian O'Toole VK2ZIO - Kurrajong Radio Museum.

Regrettably the station has now closed and has been replaced by a computer display!

Pierce has contributed a great deal to the progress and documentation of our hobby not only through his magazine articles but in a number of other very positive ways. Perhaps one of his more interesting and significant contributions goes back to the time he joined *Radio and Hobbies*. Neville Williams VK2XV was Editor and when clearing out an office previously occupied by John Moyle - but earlier by Ross Hull, Technical Editor of the pre-curser to *R&H, Wireless Weekly* (Est. 1922) - Neville discovered behind a filing cabinet, a framed listing of Wireless Stations. This was produced by the Wireless Institute of NSW in 1912 – our first printed list which included amateur stations in NSW. Neville gave it to Pierce and recently Pierce handed it on to the Kurrajong Radio Museum for safe keeping. Ian O'Toole VK2ZIO of the museum, has supplied a scanned copy of this first known published listing of Australian Wireless Stations to the WIA Archive; a significant contribution by Pierce to our history.

Photo 6: Pierce at Kurrajong Radio Museum 15 August, 2009. Courtesy of Ian O'Toole VK2ZIO - Kurrajong Radio Museum.

Pierce is a man who had (and still has) definite views about amateur radio, its significance and where the hobby is heading. So if you happen to hear VK2APQ on the air, wish him well and thank him for his significant contributions to amateur radio in this country.

Author's note: The article is based on an interview with Pierce Healy VK2APQ in April, 2011. Additional information was supplied by Ian VK2ZIO, Tim VK2ZTM and David VK3ADW. His actual birthday is believed to be 14 August.

Photo 7: VK2APQ was custodian of the Power House Museum Station VK2BQK. Courtesy of Ian O'Toole VK2ZIO - Kurrajong Radio Museum.

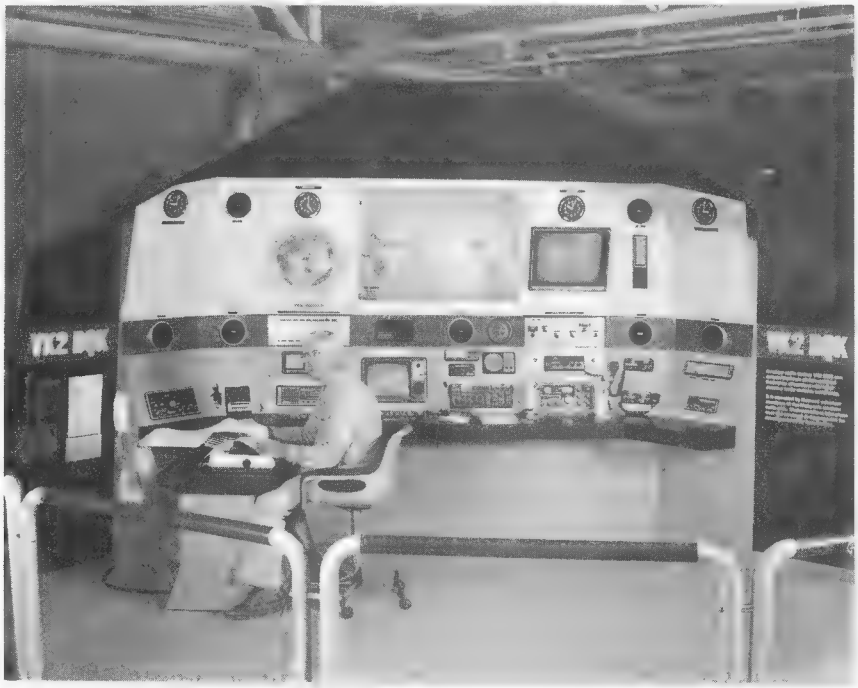

Photo 8: First page of article on Power House Museum Amateur Radio Station.

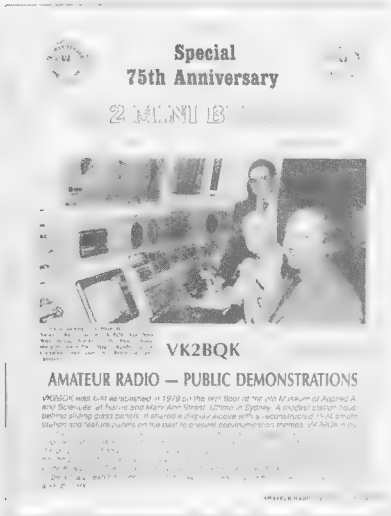
Special
75th Anniversary

VK2BQK

AMATEUR RADIO — PUBLIC DEMONSTRATIONS

Hamads

WANTED – NATIONAL

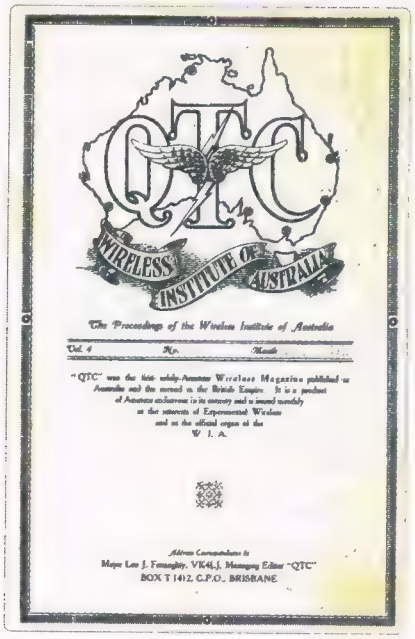
QTC
WIRELESS INSTITUTE OF AUSTRALIA
The Proceedings of the Wireless Institute of Australia
Vol. 4 No. Month
"QTC" was the first solely-Amateur Wireless Magazine published in Australia and the second in the British Empire. It is a product of Amateurs exclusively in its entirety and is issued monthly in the interests of Experimental Wireless and as the official organ of the W. I. A.
Address Correspondence to
Major Leo J. Fenaughty, VK4LJ, Managing Editor "QTC"
BOX T 1412, C.P.O., BRISBANE

Early copies of QTC magazine.
The WIA Archive is seeking early copies of QTC magazine for copying and/or adding to the WIA Archive's shelves.
QTC was published in Queensland and claimed to be the first solely Amateur Wireless magazine in Australia and second in the British Empire!
The format was duplicated foolscap pages stapled, with a light blue/grey front cover. QTC was published in the late 1920s/early 1930s, ceasing in November 1931; VK4LG was the dedicated editor. There was a later version in Queensland. We are presently interested in the early editions only.
Please contact Peter VK3RV via email *vk3rv@wia.org.au* or c/o the National Office in Bayswater if you can help us locate this important part of our history.

FOR SALE – VIC

Radio Projects for the Amateur - Volumes 1 - 4 are back in print by popular demand. Practicable plans for the construction of receivers, transmitters, antennas and couplers, test equipment, with lots of workshop notes, prepared by Drew Diamond, VK3XU.
Available from the WIA Online bookshop, *www.wia.org.au*

FOR SALE – NSW

Tilt tower, 11 metres to the top of centre pole. Has 144, 432 and 1296 long yagis, rotator and some cable. Contact Glen Jennings VK1GL, on 02 6254 8002.

WANTED – NSW

YAESU FT-107 circuit diagram. Contact Malcolm Sinclair VK2BMS, phone 02 9958 1114 or email *vk2bms@bigpond.com*

FOR SALE – SA

The popular VK5JST Antenna Analyser kits are still available through the South Coast Amateur Radio Club. Improve your HF antenna efficiency by building yourself, arguably, the most useful item for your shack.
See www.scarc.org.au or contact SCARC, PO Box 333, Morphett Vale. SA. 5162. Alternatively email *kits@scarc.org.au*

WANTED – WA

An 'old' mechanical CW bug key, whether working or not. This bug uses a piece of weighted spring steel. Alternatively does anyone have the article which gives construction details and plans to make one from metal?
Bill VK6LT QTHR or *vk6lt@wia.org.au*

ADVERTISERS INDEX

Av-com	55
ATRC	5
Com-an-tena	19
Cookson (Jackson Bros)	55
Hamak Electrical Industries	55
Icom	OBC
Jaycar	17
Kuhne Electronic	29
TET-Emtron	14
TTS	15, 55
Yaesu (Vertex)	IFC

Contributions to Amateur Radio

AR is a forum for WIA members' amateur radio experiments, experiences, opinions and news.

Your contribution and feedback is welcomed.

Guidelines for contributors can be found in the *AR* section of the WIA website, at *http://www.wia.org.au/members/armag/contributing/*

Email the Editor: *editor@wia.org.au*

About Hamads

- Submit by **email (MUCH PREFERRED)** or if written and mailed please print carefully and clearly, use upper AND lower case.
- Deceased estates Hamads will be published in full, even if some items are not radio equipment.
- WIA policy recommends that the serial number of all equipment for sale should be included.
- QTHR means the address is correct in the current WIA Call Book.
- Ordinary Hamads from those who are deemed to be in general electronics retail and wholesale distributive trades should be certified as referring only to private articles not being re-sold for merchandising purposes.
- Commercial advertising on these pages Contact admanager@wia.org.au.
- Copy to be received by the deadlines on page 1 of each issue of Amateur Radio.
- Separate forms for For Sale and Wanted items. Include name, address STD telephone number and WIA membership number.

'Hamads'
PO Box 2042
BAYSWATER VIC 3153
hamads@wia.org.au

TRADE PRACTICES ACT
It is impossible for us to ensure that the advertisements submitted for publication comply with the Trade Practices Act 1974. Therefore, advertisers will appreciate the absolute need for themselves to ensure that the provisions of the Act are strictly complied with.

VICTORIAN CONSUMER AFFAIRS ACT
Advertisements with only a PO Box number address cannot be accepted without the addition of the business address of the box-holder or seller of the goods.

AMIDON
FERROMAGNETIC CORES
tts systems
Phone 03 5977 4808. Fax 03 5977 4801
info@ttssystems.com.au

VKHAM.COM
AUSTRALIAN AMATEUR RADIO
Hundreds of pages and links related to Amateur Radio and radio in general
HOME OF
- VK Classifieds
- VK Auctions
- VKs on the Internet

Repeater Maps, Software, Prefix Maps and more...

RM Products Italy
are now available in Australia after the appointment of
Hamak Electrical Industries Pty Ltd
as distributor for RM products
Visit the Hamak website at
Hamak.com.au
for
Linear amplifiers, Power supplies and accessories

JACKSON BROS
www.jacksonbrothers.com.au
Highest quality products made by UK craftsmen
Variable and trimmer capacitors, reduction drives, dials, ceramic standoffs
CATALOGUES, PRICE LISTS AVAILABLE
HAMMOND ENCLOSURES
HAMMOND MANUFACTURING *Large range of quality electronic enclosures for the discerning Radio Amateur.*
Diecast, extruded aluminium and plastic enclosures and instrument cases. As seen in many ARRL projects.
Cookson Controls CHARLES I COOKSON PTY LTD
11-13 Port Rd Queenstown SA 5014
Tel: (08) 8240 3200 Fax: (08) 8240 3233
sales@jacksonbrothers.com.au
ccookson@hammfg.com
ALL MAJOR CREDIT CARDS ACCEPTED
SOLE AGENTS AUSTRALIA AND NEW ZEALAND

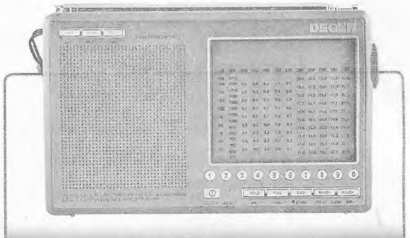
DEGEN 1103 HF Receiver
Pocket sized, 100 kHz - 29,999 kHz
LCD display, SSB, AM wide/narrow
FM Stereo, DX/Local, 10 m long wire
NimH batteries & charger
Earphone & Carrycase included
Full review Silicon Chip Jan 2007
ONLY $99 with 12 month warranty
Av-Comm Pty Ltd
24/9 Powells Road
Brookvale NSW 2100
Tel: **02 9939 4377**
Fax: **02 9939 4376**
Email: ***info@avcomm.com.au***
www.avcomm.com.au

Mobile Repeater Mast Van
Chrysler Voyager 1999, 120ks Automatic, rear seats have been removed, 8.5 metre high mast.
Four new tyres, serviced every 5,000ks.
Cost to supply and fit mast alone was $15,000.
Sale price for van and mast is $11,000.
Paul **0433 137 392**

Directory

National Office

Unit 20, 11-13 Havelock Road
PO Box 2042 BAYSWATER VIC 3153

Contact 10 am to 4 pm weekdays
Phone **03 9729 0400** Fax **03 9729 7325**
nationaloffice@wia.org.au
http://www.wia.org.au

The Amateur Service
... a radio communications service for the purpose of self training, intercommunication and technical investigation carried out by amateurs, that is, by duly authorised persons interested in radio technique with a personal aim and without any pecuniary interest.
56 ITU Radio Regulations

Advisory Committees

New South Wales/ACT Advisory Committee
Email: vk2advisory@wia.org.au
John Bishop VK2BK*
Dominic Dahl VK2YDD
Timothy Mills VK2ZTM / VK2UJ
Gilbert Hughes VK1GH

Victorian Advisory Committee
Email: vk3advisory@wia.org.au
Bob Tait VK3XP *
Luke Steele VK3HJ
Noel Ferguson VK3FGN
Chris Chapman VK3QB

Queensland Advisory Committee
Email: vk4advisory@wia.org.au
Don Wilschefski VK4BY
Kevin Johnston VK4UH
Michael Charteris VK4QS*
Ken Fuller VK4KF

South Australian Advisory Committee
Email: vk5advisory@wia.org.au
David Clegg VK5KC *
Peter Reichelt VK5APR
Ben Broadbent VK5BB
Trevor Quick VK5ATQ

Western Australian Advisory Committee
Email: vk6advisory@wia.org.au
Martin Stretton VK6ZMS*
Heath Walder VK6TWO
Craig Lamb VK6FLAM

Tasmanian Advisory Committee
Email: vk7advisory@wia.org.au
David Potter VK7YUM
Clayton Reading VK7ZCR
Justin Giles-Clark VK7TW *
Peter Rumble VK7IY

Northern Territory Advisory Committee
Email: vk8advisory@wia.org.au
Peter Blackadder VK8HPB*
Garry Woods VK8GW
Alan Baker VK8AB
Mark Sellers VK8MS

**Denotes nominated by the WIA Board ("Nominated Member")*

GippsTech 2011 - A personal review

Continued from page 7

Coax 'fly leads' for interconnecting UHF-SHF gear, in both flexible and hardline models, are obtainable at really cheap prices by the handful at field days, GippsTech events and from sellers on the web. I have accumulated a considerable assortment in recent years and Neil's presentation not only taught me a lot, but has given me the confidence to tackle the job of modifying my coax fly leads to suit my purposes.

'Mr Digital', Rex VK7MO, has done a lot of work chasing aircraft enhanced contacts in sorties up and down the eastern states. Rex's presentation on 'Comparisons of aircraft scatter at 144, 432, 1296 and 10 GHz' detailed his well-considered investigations and observations, and offered some sage advice on pursuing multi-band portable contacts on the VHF and microwave bands via this mode.

Rex's lecture on 'DX strategies for 10 GHz' shared the thinking behind the attempts that he and partner stations went through to gain some remarkable (even 'world-ranked') DX successes. This should serve as a 'see this before starting down this road' kind of roadmap for 3 cm tyros.

Ron VK3AFW's presentation on 'Doppler shift estimation for 10 GHz aircraft enhancement' proved quite an eye-opener. While both voice and digital modes can be used successfully for 10 GHz AE, digital modes offer greater opportunities ... if Doppler is taken into account, especially if the aircraft path crosses at an angle to the direct path between station locations. Geometrically, it is a rather more complex problem than it appears at first glance. However, knowing what to expect under a range of circumstances has a bearing on choice of modes to succeed in making contacts.

I leave the review of my two presentations for others.

I am still poring through the Proceedings of the 2010 GippsTech Conference, which I picked up over the weekend.

Some extracts from ALARA News by Margaret Blight VK3FMAB – Publicity Officer

Jean VK3VIP with certificate.

At the recent AGM of the Eastern & Mountain District Radio Club, Jean VK3VIP received a Certificate in appreciation of her ongoing contribution in providing drinks and refreshment at the Club's meetings. We certainly agree Jean deserves recognition for her dedication.

Left to right: Lea VK5FKSA, Jenny VK5FJAY and Bia.

Four ladies helped run the communications van during the Scout Radio Activities Group (SA) effort in support of the Riverland Paddling Marathon. The team members were up very early (0500).

Antenna workshop at EMDRC.

Margaret VK3FMAB and Jean VK3VIP enjoying the antenna building workshop held at the Eastern & Mountain District ARC clubrooms. The task was to build an antenna using very basic materials – wire coat hangers and a broom handle or garden stake. Jean is busy hammering the kinks out of the coat hanger wire, with the assistance of some of the other club members.

Volume 79 Number 9 SEPTEMBER 2011 Print Post Approved PP349181/0042

Experience Icom technology in analogue & digital

ICOM 520

ICOM

To find out more about our latest products, call Icom on 03 9549 7500 or visit www.icom.net.au